EMC AWARE

www.emcaware.com Issue 3 @emccompliance

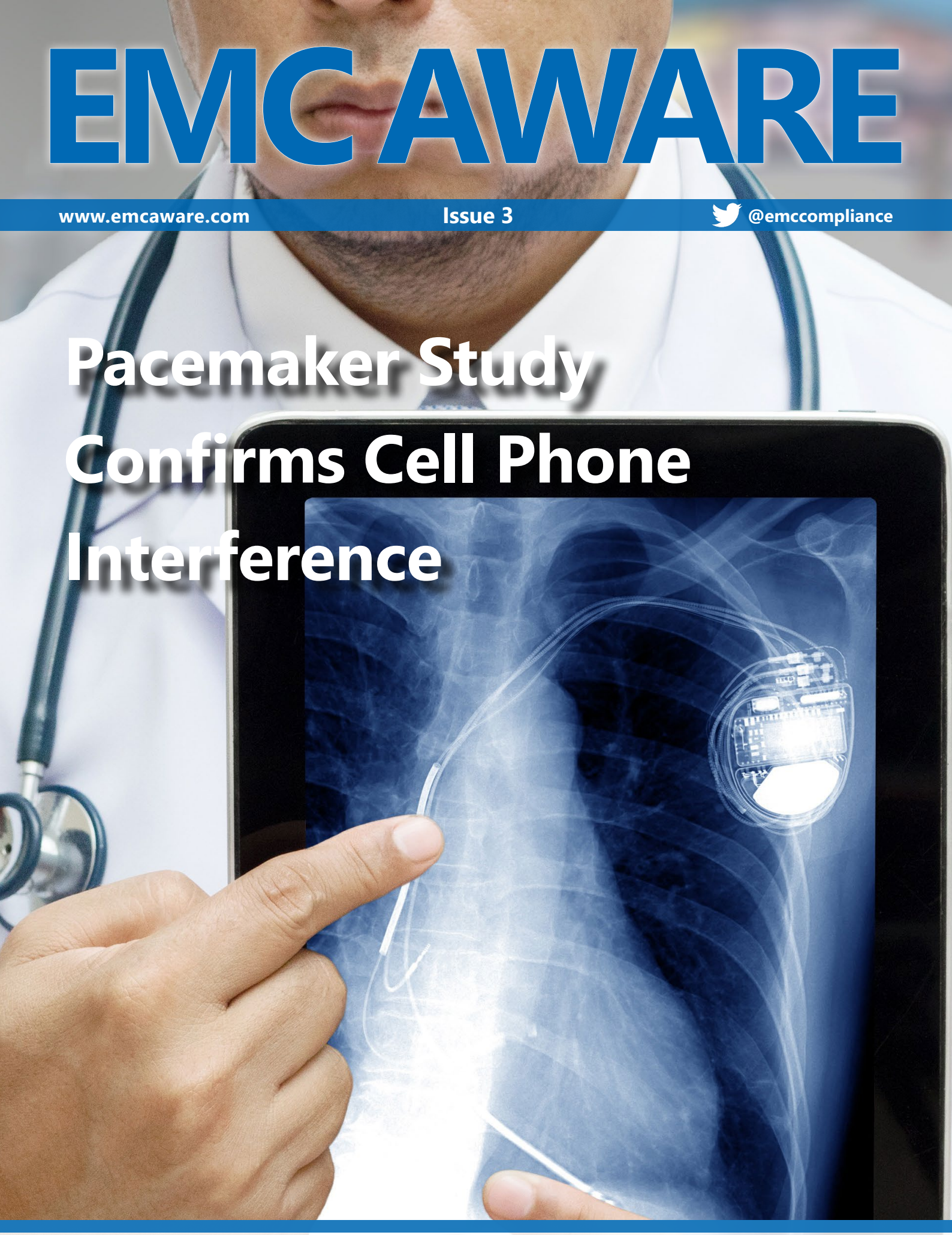

Pacemaker Study Confirms Cell Phone Interference

IEEE EMC Society No Longer Supports iNARTE

Design Compliance for EMC & Safety 2023

The Future Is Electric, Let Us Safeguard It

MESSAGE FROM THE EDITOR

Dear Readers,

With just a few days into 2023, I noted that last year was not the best. There have been a several events which have changed the world. These may have a repercussion on the way we live and work in engineering and EMC compliance. Some of these may provide a different opportunity for you to reflect on and determine a course of action.

We have seen a huge demand for mobile services for very many varied purposes. Primarily this had been driven by the mobile telephone and the attendant communications and data demands of individuals. Higher frequencies may soon be a consideration for use together with the wider bandwidths. We need to determine how we maintain interference free signals. Similarly, we have to ensure that communications services do not cause erroneous operations of some other allied service on adjacent or even in-band frequencies. Consider the ISM bands for instance, where the devices are license free. Regulators have to prevent medical devices from abnormal operations when other devices are in operation. That is where we could be involved in testing.

With the growth of mobile services, more wireless kit abounds and this results in more devices being co-located and operated in closer proximity to each other. The operational distances between them could be even less than the present 3 metre standard distance. What does this mean when the test limit does not reflect the field operating circumstance. The standards may require revision.

In the case of the military and security forces, the teams will be communicating with each other inside of the 1 metre distance. They may not wish to have their communications overheard by anyone else further afield. Would this require improved filtering or different shielding? Perhaps you have encountered the situation already and can offer that alternative service.

I do see that the commercial standard test distances will reduce to 1 metre and the military and aerospace standards will reduce to 300 mm or less. There may be other attendant changes introduced at the same time. Are any of us geared up for these future changes?

One thing that I had a personal experience with while working from home. My radios are deafened by the amount of spurious noise that had arisen in the neighbourhood. The proliferation of wireless enabled devices and attendant switched mode power supplies as well as new LED luminaires have raised noise floor levels. It is hard to say definitely which is the significant contributor. Suffice is that listening to the shortwaves and VHF band II is more difficult. I now have to do some detective work and possibly change my listening habits as well.

Technical advancements have been making changes to the T&M equipment we use, giving greatly improved functionality at a lower cost point. Are you taking advantage of this to improve your technical knowledge and provide new or additional services to your customers? A rise in the usage of electric vehicles has also meant that newer and higher capacity charge points are deployed. How do we provide test services for these and also ensure that their wireless connectivity is acceptable in high density locations? How do we also deal with EV dynamic power charging on the move through wireless power transfer?

News media has provided reports of commercial electronics now being used for military purposes. It may be a moot point at present but many electronic devices are capable of operating in rugged locations. If these are commercial devices, are they being tested to commercial standards? Do the applied tests need to be modified?

Do let me know your views at editor.EMCawaremag@gmail.com.
All the best for 2023.

Chris Nicholas
Editor

Issue 3 | February 2023

Contents

4

14

38

46

Suppressing Radio Frequency Noise With Ferrite Cores

How Ferrite Cores Can Help A Product Pass Electromagnetic Compatibility (EMC) Tests

Undesired, high frequency electrical noises can cause electrical equipment to malfunction. One way to combat this is by using ferrite cores. They work by suppressing electromagnetic emissions by blocking low frequency noise while also absorbing high frequency noise to avoid electromagnetic interference (EMI). Here, Dr Min Zhang, EMC consultant at Mach One Design, in collaboration with electronics component manufacturer REO UK, discusses how ferrite cores can be used on a cable to help a product pass the EMC limit.

Ferrite materials like Manganese-Zinc (MnZn) or Nickel-zinc (NiZn) are often found in an inductor's core material. They are iron based magnetic materials in the form of ceramic, meaning they have high magnetic permeability and high electrical resistivity, making them ideal to use for inductors. They are also known for being used to create a range of inductive and resistive components called ferrite cores.

Ferrite cores are extremely useful in suppressing radio frequency noise on cables and, during the product development stage, they are often useful for quick troubleshooting and product fixing. For a product that is close to the market launch deadline but the iteration of the board design is no longer feasible, sometimes putting a ferrite core on cables is the only cost-effective way of getting the product to pass the EMC limit.

> "Engineers Should Be Aware That Although The Core Materials Are Often The Same, Different Cores Work In Different Frequency Ranges"

Ferrite cores can either be used on a single wire or a bundle of wires. A single-turn feedthrough configuration can sometimes provide sufficient attenuation on the line. However, most of the time, you might need to put multiple turns of a cable through a ferrite core to increase the impedance. The impedance is the resistance of an electrical circuit or component to an alternating current. The impedance value of a ferrite core is proportional to the square of the number of turns.

Engineers should be aware that although the core materials are often the same, different cores work in different frequency ranges depending on the manufacturing of these cores. Manufacturers will often have specific cores for a specific frequency range, so it's important to use the right cores for the right job. For example, if it is the medium frequency range noise between a few MHz and 30 MHz that needs to be suppressed, it is recommended to find a ferrite core where the impedance peak is in that frequency range.

Challenges With Ferrite Cores

Firstly, the way ferrite cores are used is dependent on their required application. In industries like automotive or aerospace, using multiple turn ferrite cores is often not allowed. This is because there is a limit to the bending radius of a cable.

Engineers can also face a few issues with a multiple-turn configuration of a ferrite core. Firstly, as the number of turns increases, so does the turn-to-turn capacitance. Capacitance is the capability to store electric charge in an object or device. So, while this may not be a problem at a lower frequency, it does have an impact at a high frequency. For example, a three-turn configuration may start dropping once it reaches 40 MHz. Worse still, the impedance of a three-turn configuration may drop lower than that of a one turn configuration should it exceed 200 MHz.

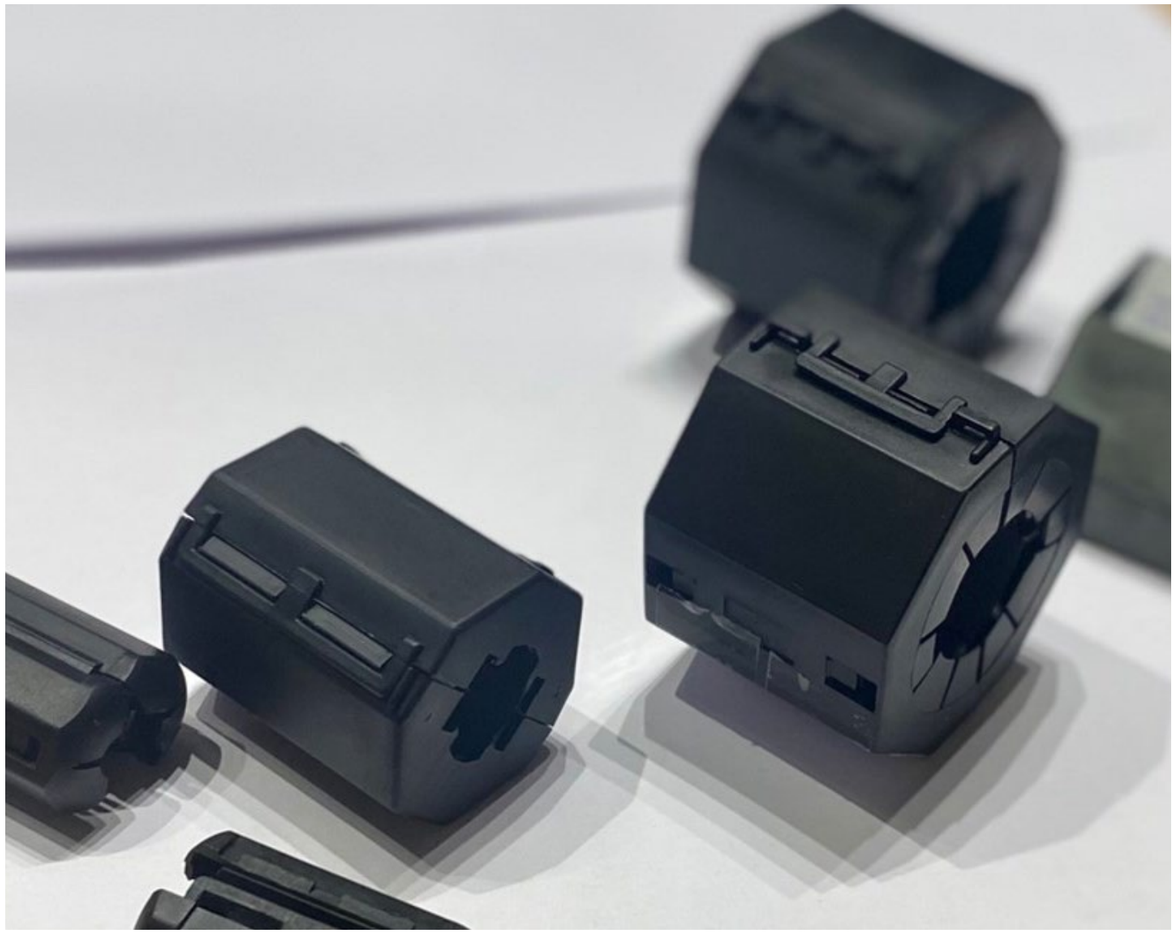

Figure 23 Ferrite Cores For Round Cables

Other Considerations With Ferrite Cores

One consideration that engineers will need to make is the location of the ferrite core. It is known that ferrite cores have the greatest effect where the RF current on the cable is the largest. So, positioning a ferrite core adjacent to a low-impedance connection is a good approach. An example of this would be the cable entry point of a chassis. There are rare situations where placing a ferrite core could lead to increase emissions at a certain frequency. However, in those scenarios, the most practical approach is to try positioning the cores in a few locations so you can compare the results.

Overall, although ferrite cores are useful in suppressing the RF noise on a cable, they cannot replace a properly designed inductor. In environments where vibration and shocks are prevalent, ferrite cores need to be secured by cable ties or other means. While a well designed inductor is preferred, ferrite cores are useful as a last resort in the design and development stage or when the production volume of the products is very small.

To find out more about inductors and considerations for designing a filter circuit, make sure to read the next issue of Electronics World for the next article in this series, about the importance of resistors in an EMI filter. You can also find out more about REO UK's range of electrical components on its website or contact Dr Zhang at min.zhang@mach1design.co.uk

EMC Technologies
EMC-EMF-Safety Approvals

EMC: Designing for Compliance

Practical Techniques | Plain English | Immediate Project & Financial Benefits

2023 Design Courses

www.emctech.com.au/keith-armstrong-design-compliance-emc-safety-2023

Melbourne	Sydney
March 20 – 24	March 27 – 31

UPDATED: Keith's EMC courses have been significantly updated to keep pace with technical progress, and improved.

His updated Safety Design course covers the LVD and the Radio Equipment Directive (RED) – which now often replaces the LVD, UK Approvals since Brexit, IEC 62368-1 (which now replaces IEC 60950-1 and IEC 60335-1)

These courses have been very popular worldwide for 29 years because they teach well-proven practical and usable techniques for quick, cost-effective design for safety, functionality (i.e. Signal Integrity, SI, and Power Integrity, PI) and Electromagnetic Compatibility (EMC)

CHERRY CLOUGH CONSULTANTS LTD
emc STANDARDS

Presented by Keith Armstrong, a practising EMC & electronic design consultant, well-known author and articulate and lively presenter. His very popular visits to Australia & New Zealand have excellent approval rates, and here are some comments received:

'You have the most comprehensive work in my opinion for a practical EMC engineer or tech instead of academic based information with no relationship to practice.'

'By the way – just had XXXX in with their latest project. Their design chap was extolling your virtues – It passed first time – no remedial action required – virtually noise floor emissions – and it included Ethernet, PoE, USB and DSP! What more can I say!'

'The courseware is so fine and easy to study. Thank you very much!'

'We enjoyed the talk, and I thought it was one of the most common-sense ones I've heard.'

'I would also like to thank you for the interesting and informative course that you presented. I have already begun to implement some design changes in an ongoing project.'

'I attended a couple of EMC courses in Auckland some years back and like to let you know that your course has been the best and most useful course I ever attended!'

'All participants were very experienced yet I'm sure that the others found it as valuable as I did.'

"There's no question my time was well spent, I have learned things that I need to act upon immediately."

2023 EMC: Design Consultancy and Training

Keith Armstrong and his Associates below will all be visiting Australia in March 2023. They are independent consultants who help designers, manufacturers, system integrators, installers, users deal quickly and cost-effectively with real-life interference (EMI), or compliance with EMC and Safety Directives and similar regulations worldwide. All applications, all industries, all sizes/scales. If you need design consultancy or training during March 2023, please contact keith.armstrong@cherryclough.com or https://www.cherryclough.com

Andy Degraeve

Andy received the M.S. degree in electronics and computer engineering from the KU Leuven, Technology Campus Ostend, Belgium, in 2014.

From 2014 till 2018, he was a Research Assistant at the KU Leuven Campus Bruges, Research group ReMI, Reliability in Mechatronics & ICT.

His main research interests included electromagnetic compatibility, immunity and functional safety in life or mission critical situations.

From 2019 till 2020 he was the Technical and Product Manager at Schlegel Electronic Materials, a member of eMei group, in Belgium, with a focus on shielding, absorbing and thermal management materials.

From 2020, he is focussing on EMC education and diagnostics using low-cost test equipment.

Dr. Min Zhang

EMC & SIPI expertise

- Specialized in electrically powered vehicles and chargers, home appliance, industrial, professional and medical sectors
- Advanced insight on product research and development
- Background in electronics design, motor control for high-tech volume production business
- In-depth knowledge and experience in electromagnetic design

Chris Nicholas

EMC & RF Design expertise, covering:

- Automotive
- Space
- Military & commercial communications
- Retail market electronics
- Product R&D, Design For Manufacture
- RF comms links, conventional and covert antenna design, HF & VHF propagation studies
- EMC Laboratory Setting-up
- Electrical & RF equipment rack design and implementation
- EMC Installation

Recent Experience

- Military EMI Shelters
- Commercial Power Supply Units
- Screened Rooms
- Clean Room Equipment Racks

Global Markets

- All integrated circuits and opamps have been 'die-shrunk' according to Moore's Law every two years since the 1970s, with the result that they now all emit or are susceptible to microwave frequencies or higher, with the result that their EMC is generally worse every two years on average.
- Switching power devices are also becoming at least ten times nastier for EMC by using SiC and GaN technologies to switch faster, creating much more noise in FM, television and LTE frequency bands.
- Wireless Power Transfer is proving to create unique EMC problems.

  So, we update these courses so they provide regular and practical up-skilling, allowing you to gain competitive advantages in all electronic technologies, in any applications, at any size/scale/volume, regardless of which test standards apply (consumer, commercial, ITE, industrial, medical, automotive, military, aerospace, rail, etc.)
- Design techniques for compliance with national and international EMC standards e.g. RCM, CE, FCC, VCCI, CCC (China), MIL-STDs.
- EMC for Wi-Fi, GSM, GPRS, 3G/UMTS, 4G/LTE, Bluetooth, ZigBee, WLAN, RLAN, etc., and for preventing interference with co-located GNSS receivers.

Participants will receive:

- A PDF copy of the presented course material in full colour, for the courses they attend. Colour-printed and bound course materials are available at extra cost, when registering.
- A certificate of attendance, signed by Keith
- A USB stick containing a very great deal of useful EMC information on design, PCB layout, systems and installations, testing, Functional Safety risk management of EMI, risk management for medical device EMI, complying with the EMC Directive, CE + CE ≠ CE, nearly 1,000 'Banana Skins', and much more.

Sponsored by EMC Technologies Pty Ltd

EMC Technologies has been operating since 1992 and is the largest and most accredited EMC, EMR & Safety test house in Aus/NZ with four fully accredited laboratories in Melbourne, Sydney, and Auckland.

EMC Technologies reports are accepted in most countries including Europe (CE marking), USA (FCC), Japan (VCCI), Canada (ISED), Taiwan (BSMI), Singapore (IMDA), VCA(UK) to name a few. No other test house in Australia/NZ offers such a wide scope of international recognition.

EMC Technologies
EMC-EMF-Safety Approvals

Course contents

Essential & Advanced SI, PI and EMC design for cost-effective PCBs in 2023

2 full days.

Melb: Monday March 20th and Tuesday March 21st

Syd: Monday March 27th and Tuesday March 28th

Relevant for: *All electronic, mechanical, and PCB designers and their managers, in all industry areas worldwide including: medical, consumer, household, IT, data/tele/radiocoms, instrumentation/control, pro-audio/video and broadcasting, industrial, automotive, railway, marine, aerospace, military, security, power conversion, etc.*

Day 1: Essential SI, PI & EMC design for cost-effective PCBs in 2023

- Using these slides to help 'De-Risk' any project's SI, PI and EMC
- Saving time and cost
- EM Zoning techniques (i.e. circuit segregation)
- Interface analysis, filtering, and suppression
- Planes for 0V(GND) and other power rails (PWR)
- RF-bonding PCB Reference Planes at EMZ boundaries
- Power supply decoupling
- Switching power converters (AC/DC, DC/DC, DC/AC, etc.)
- Wireless Power Transfer
- Matched transmission line techniques
- Layer stacking and trace routing
- Devices with BGA packages and/or multiple DC rails
- Some useful references, sources, and webinars

Day 2: Advanced SI, PI & EMC design for cost-effective PCBs in 2023

- When should we use advanced PCB techniques?
- Future trends and their implications
- Guidelines, approximations, simulations, and virtual design for SI, PI and EMC
- Advanced EM Zoning techniques
- Advanced interface filtering and suppression, including using BLS (board-level shielding) and Metamaterials to 60+ GHz
- Advanced RF-bonding for PCB RF Reference Planes at EM Zone boundaries
- Advanced PCB planes, and co-locating wireless antennas
- The totally shielded board assembly
- Damping the resonances in parallel metal structures, including Metamaterial methods such as: Virtual Ground Fence; EBG (Electromagnetic Band Gap); HIS (High Impedance Surface), Split-Ring Resonators, etc.
- Advanced PCB power supply decoupling
- Buried components, especially buried capacitance decoupling
- Advanced transmission lines, including differential signalling up to at least 32Gb/s per lane
- Microvia board design and manufacturing (i.e. High Density Interconnect, HDI)
- 3-D Moulded, Printed, or Additively Manufactured PCBs
- Advanced crosstalk
- Some final tips and tricks
- Some useful contacts, sources, and references

'I attended a couple of EMC courses in Auckland some years back and like to let you know that your course has been the best and most useful course I ever attended!'

Design for EMC in 2023

1.5 days.
Melb: Full day on Wednesday March 22nd plus the morning of Thursday March 23rd
Syd: Full day on Wednesday March 29th plus the morning of Thursday March 30th

(Modules 5, 7, 8 not presented, but provided as course notes anyway)

Module 2: EMC techniques for cables and connectors
Accidental antenna behaviour of all conductors. Using fibre-optics, and other alternatives to conductors. The "RF Reference". Cable classification and segregation. Good practices for shielded and unshielded interconnections: DM & CM paths. Shielding techniques for cables. Terminating cable shields. Interconnecting shielded enclosures. Dealing with 'ground loops'. Transmission-line interconnections. Some useful references.

Module 3: EMC filtering
Filtering is not 'black magic'. How filters work. The advantages of soft ferrites. CM filtering. Specifying filters. Real-life problems with resonances, inductors, and capacitors. Earth leakage currents and safety. Filter construction, mounting, and cabling. The synergy of filtering and shielding. Some useful references.

Module 4: EMC shielding (DC to over 50 GHz)
Economic issues for shielding. Shielding with metal plates (image planes). How shielded enclosures work. DC and low frequency shielding. The problems caused by apertures. The problems caused by box resonances. The problems caused by conductor penetrations. Shields in the near field of a source. RF-bonding with multiple metal bonds or conductive gaskets. Waveguides-below-cutoff. Shielding of displays. Shielding of ventilation. Shielding of plastic enclosures. Preventing corrosion at shielding joints. D-I-Y testing SE before hardware or software is ready. Shielding with 'clamshell' enclosures. Some free SE calculators and useful references.

Module 11: Suppressing electrostatic discharge (ESD)
ESD threats. Insulation techniques. Shielding techniques. Suppressing signal, data and power connector pins and conductors. PCB layout for ESD suppressors. Earth lift problems in systems. Protecting control, data and signals from errors. Some useful references, including "software techniques for ESD suppression".

Module 12: Suppressing surge transients on AC & DC supplies; signals, and data
What transients are, and how they cause damage. Using galvanic isolation. Using filters. Using surge protection components (SPCs) – types. Rating SPCs. Protecting and maintaining SPCs. Lead inductance and "let-through" voltage. Avoiding the effects of SPC capacitance on signals. Types of surge protection devices (SPDs). Electronic transient protection for DC power supplies. "Earth/ground lift" problems in systems. Data needs error correction. Dealing with long-duration overvoltages. Some useful references.

For many more details on these courses, *background information on why they are so necessary and valuable, and information on Keith Armstrong, visit: www.emctech.com.au/keith-armstrong-design-compliance-emc-safety-2023*

Complying with Edition 4 of IEC 60601-1-2 + A1, A2 Medical EMC for Basic Safety and Essential Performance

0.5 day.
Melb: The afternoon of Thursday March 23rd
Syd: The afternoon of Thursday March 30th

- This course covers compliance for both Europe (EU), UK and the USA
- 60601-1-2 Ed.4's differences from Ed.3
- AMD1 to Ed.4 added magnetic field immunity tests, and more
- 60601-1-2 Ed.4's requirements for achieving Essential Performance
- Deficiencies in EMC immunity testing for achieving Essential Performance
- IEC TR 60601-4-X, the practical approach to achieving Essential Performance
- Applying IEC TR 60601-4-X to compliance with 60601-1-2 Ed.4 AMD1
- Complying with Product Liability Legislation in the EU, UK and USA

The Safe Design of Electrical Equipment in 2023, and compliance with the LVD or RED – and their equivalent UK Regulations

1 day.
Melb: Full day on Friday March 24th
Syd: Full day on Friday March 31st

(Sections A and F below not presented, but provided as course notes anyway)

A Basic Safety Principles, including doing Hazard and Risk Assessments (not presented due to time restrictions)

B Non-CE Marking Safety Directives

C Complying with the Low Voltage Directive (LVD), 2014/35/EU
The New Legislative Framework, and the new 'Blue Guide'. NLF changes between 2006/95/EC and 2014/35/EU. What the LVD applies to, and what it doesn't apply to. Relationships between the LVD and other safety Directives. The requirements of the LVD. The Technical Documentation. The Conformity Assessment procedure. EM Fields and human health. It can be dangerous to rely solely on LVD-listed standards. A single Declaration of Conformity for all Directives. Affixing the CE marking. Enforcement (in England). Management of LVD compliance. Compliance of assemblies of COTS items.

D Complying with the safety requirements of the Radio Equipment Directive (RED) 2014/53/EU (instead of the LVD)

E Design and Validation for INHERENT Safety
Using the most relevant safety standards. Single-fault safety. Electrical shock hazards. Energy hazards. Fire hazards. Heat related hazards. Mechanical hazards. Other hazards. Choosing and using components. Wiring, supply and construction. Markings and manuals. Type testing. Routine production tests. Special national conditions. Special safety techniques.

F Design/Validation for FUNCTIONAL Safety
(not presented due to time restrictions)

2023 Program Registration Form

Venue	Monday **March 20th**	Tuesday **March 21st**	Wednesday **March 22nd**	Thursday **March 23rd**	Friday **March 24th**
Melbourne EMCT Keilor Park	Essential SI, PI and EMC design for cost-effective PCBs in 2023 **AM & PM**	Advanced SI, PI and EMC design for cost-effective PCBs in 2023 **AM & PM**	Design for EMC in 2023 **AM & PM**	**AM** Design for EMC in 2023 (Continued) **PM (1.30)** Complying with Edition 4 of IEC 60601-1-2 +A1, A2 Medical EMC for Basic Safety and Essential Performance	The Safe Design of Electrical Equipment in 2023 **AM & PM**

Venue	Monday **March 27th**	Tuesday **March 28th**	Wednesday **March 29th**	Thursday **March 30th**	Friday **March 31st**
Sydney EMCT Seven Hills	Essential SI, PI and EMC design for cost-effective PCBs in 2023 **AM & PM**	Advanced SI, PI and EMC design for cost-effective PCBs in 2023 **AM & PM**	Design for EMC in 2023 **AM & PM**	**AM** Design for EMC in 2023 (Continued) **PM (1.30)** Complying with Edition 4 of IEC 60601-1-2 +A1, A2 Medical EMC for Basic Safety and Essential Performance	The Safe Design of Electrical Equipment in 2023 **AM & PM**

Electronic copies of course notes are supplied and included in the price. No hardcopies provided.
Live streaming is available for registered attendees. All electronic course notes and Certificates (as PDFs) will be provided via email.

Session	Price	City	Sub-total
Essential SI, PI and EMC design for cost-effective PCBs in 2023 (1 day)	$1,000	MEL, SYD	
Advanced SI, PI and EMC design for cost-effective PCBs in 2023 (1 day)	$1,000	MEL, SYD	
Design for EMC in 2023 (1.5 days) (does not cover PCBs)	$1,500	MEL, SYD	
Complying with Edition 4 of IEC 60601-1-2 +A1, A2. Medical EMC for Basic Safety and Essential Performance (half day, from 1.30pm)	$550	MEL, SYD	
The Safe Design of Electrical Equipment in 2023	$1,000	MEL, SYD	
Lunch is at 12.30pm, complimentary with all courses		**Sub-total**	
		Plus 10% GST	
		Total cost of sessions selected (including GST)	

Name		Phone:	
Email			
Company			
Invoice address			
Dietary/other needs and any allergies		☐ On-site ☐ Online	
Payment	Visa ☐ M'card ☐ Amex ☐	EFT ☐	**EMC Technologies Pty Ltd** NAB BSB: 083 865 Account 51835 7100
Card Number:		Expiry	
Cardholder:			
Email for receipt			

Please return completed Registration form to: sales@emctech.com.au
NOTE: No refunds will apply if less than 7 days' notice is given

Layout Optimisation And Package Enhancements To Minimise Switch Node Ringing And Associated Radiated EMI In A DC/DC Buck Converter

Dr Jim Perkins - Senior Member Technical Staff - Texas Instruments

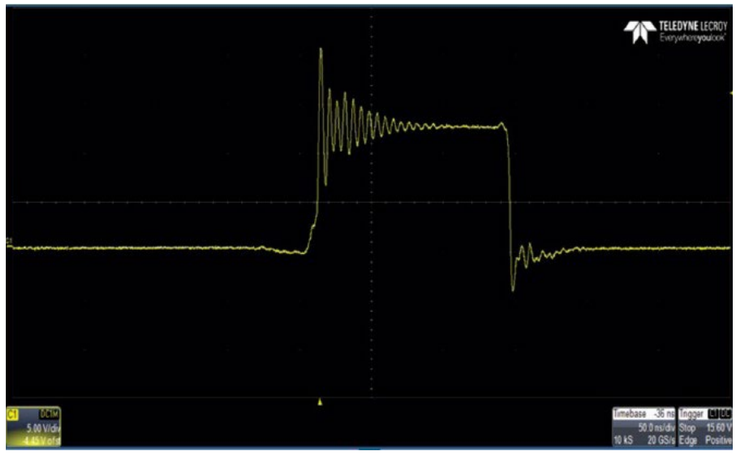

Switch Node Ringing

- Switch node ringing can be a significant source of EMI.
- Requires a resonant circuit and activation energy at the resonant frequency

Resonant Circuit

- LLoop includes inductance from the track, via, leads, bond wires, ESL
- All should be minimised

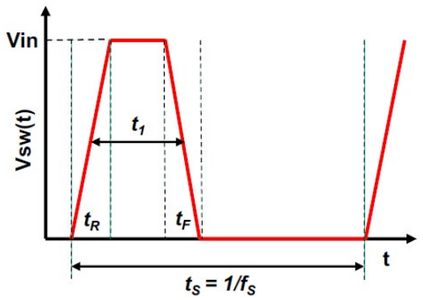

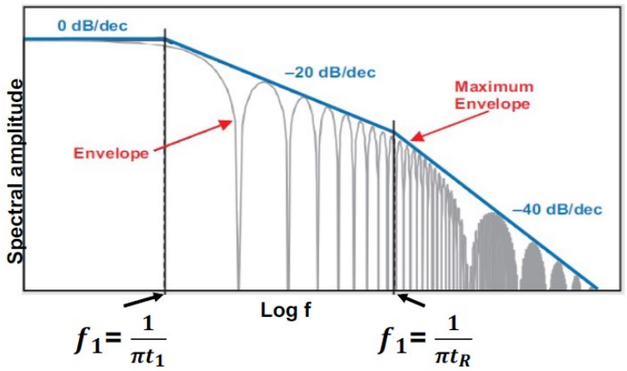

Activation Energy

- Higher switching frequency reduces passive component size
- Faster edges increase efficiency
- Both increase activation energy

Resonant Circuit

- LLoop includes inductance from track, via, leads, bond wires, ESL
- All should be minimised

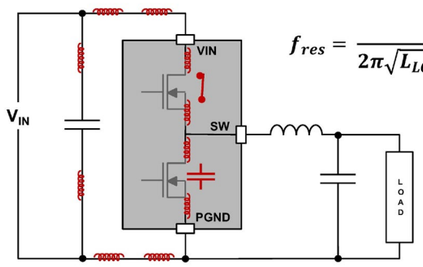

$$f_{res} = \frac{1}{2\pi\sqrt{L_{LOOP} \times C_{OSS\_LS}}}$$

Slow Down The Edges

- Adding a resistor in series with the boot capacitor slows the rise time
- The slower edge reduces the efficiency
- Recommend 0R0 RBOOT and only add resistance if required
- Gate drive resistors also possible for controllers with external FETs

Use A Snubber

- Snubber absorbs energy, damping the resonance of parasitic elements
- Reduces efficiency
- Snubber placement can compromise the layout
- https://e2e.ti.com/blogs_/b/powerhouse/posts/calculate-an-r-c-snubberin-seven-steps

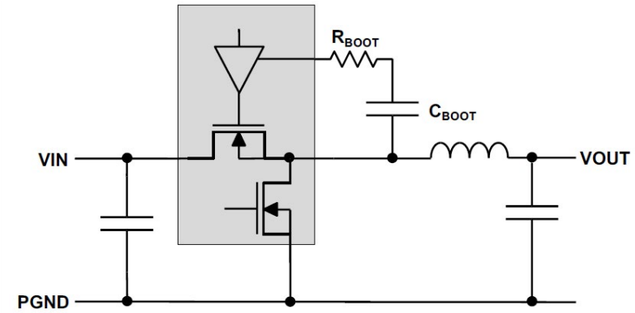

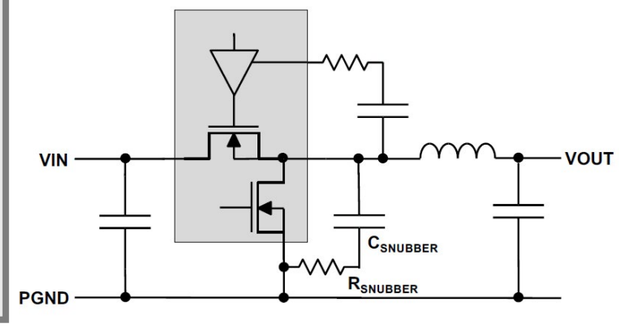

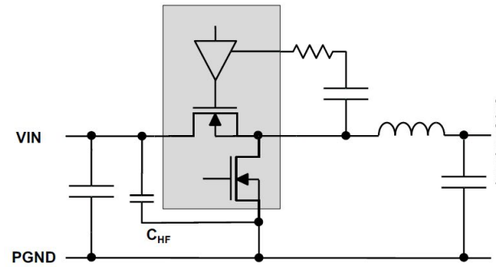

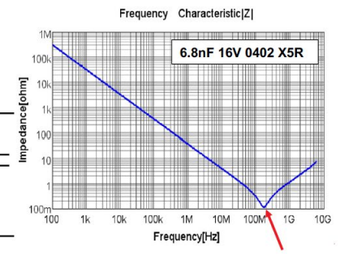

- **Select C_{HF} with $f_{Zmin} > f_{ringing}$**

Input Capacitor Position

- Every millimetre makes a difference! Minimize the area of the loop from CIN to VIN and PGND back to CIN. Return current directly to the source.
- HF Capacitor closest to the VIN pin

Smaller, Cooler, Quieter

- Smaller means higher switching frequency
- Efficiency (cooler) requires the fastest edges
- Tightly packed circuits may be more susceptible to EMI

C_{IN} 22uF 0805

C_{HF} 6.8nF 0402

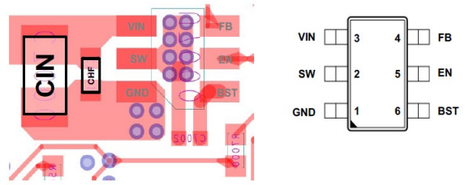

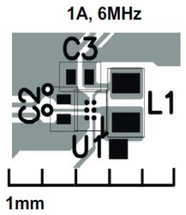

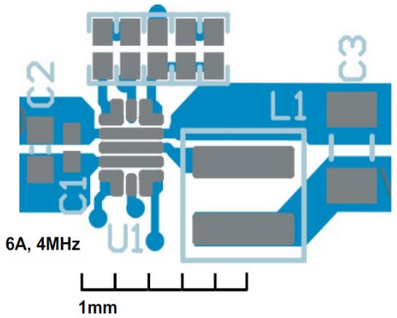

Hotrod™ Package

- Pin assignment and footprint optimised for layout
- Butterfly layout reduces inductance through parallel paths (& magnetic field cancellation)
- Flip chip on copper column eliminates bond wire inductance
- Reduces series resistance
- Enhanced thermal path

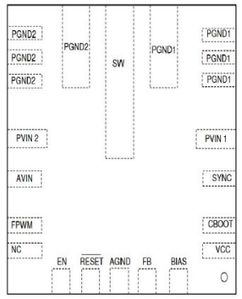

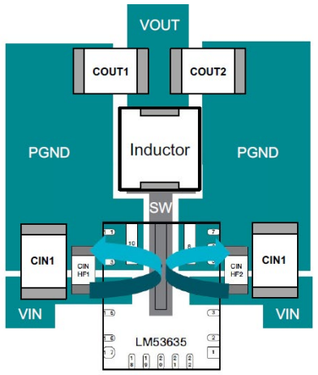

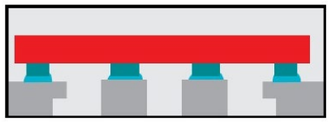

HotRod™ interconnect (Flip-chip-on-lead) QFN

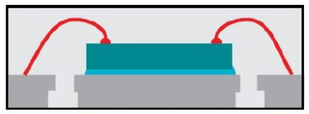

Standard bond-wire QFN package with exposed pad

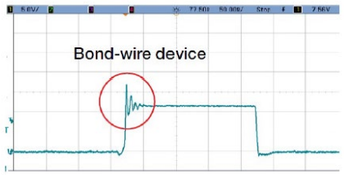

Capacitor On Leadframe

- High frequency capacitors integrated into package on the lead frame

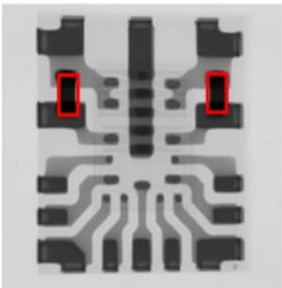

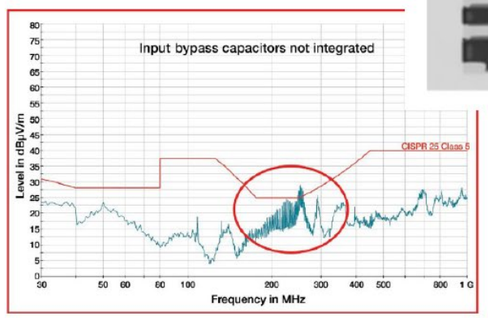

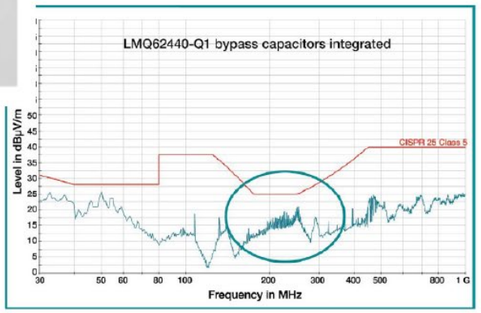

Summary

- Switch node ringing can be a significant source of EMI
- Activation energy is increased by higher switching frequency and faster edges
- Resonant frequency is a product of the COSS and LLOOP.
- Circuit/PCB solutions: bootstrap resistor, snubber, HF capacitor, CIN position.
- Package innovations for high fswitch: HotRodTM, flip chip on Cu column, the capacitor on a lead frame.

Banana Skins 911-920

Banana Skins numbers 1-855 were first published in The EMC Journal, where they have had 36 million hits! They are now being republished (with permission) by In Compliance magazine, Numbers 856-910 have been published as 'EMI Stories'

Please note: 'EMI Stories' and 'Banana Skins' are the same. New Banana Skins /EMI Stories are a regular feature in EMC Aware magazine, published every quarter.

Some of these stories are extracted from official documents and reports, some are personal anecdotes, and some come from research. Some of these EMI Stories had harmless or amusing outcomes, some lost companies large amounts of time/money, even causing bankruptcy, and some caused (or could easily have caused) injuries and deaths.

My experience is that these stories only represent the very tip of a large iceberg, with unguessable costs for manufacturers and society as a whole. As electronic devices and technologies continue to advance; more (and more complex) software and wireless communications are used; as electronic systems are increasingly integrated into systems-of-systems which no person can understand fully, and even into systems-of-systems-of-systems (including the "Internet of Things", IoT, and autonomous vehicles): the only thing of which we can be certain is that EMI problems will occur more frequently and have larger impacts on costs and safety.

I hope these stories help identify possible EMI problems in advance so that they are dealt with as part of the normal design/development procedure and don't create the embarrassment and costs of trying to correct poor EMC design after products have been shipped or systems installed.

If you have any suitable stories or know of any relevant research or reports, please tell me about them so they can be included (anonymously, if you prefer) in this list. Keith Armstrong, keith.armstrong@cherryclough.com

911) The Impact of Space Weather

It is highly likely that system failures will interact with each other to cause cascading failure modes that are fundamentally difficult to predict, and this is an area of research that has not received a great deal of attention, in part because of the complexity involved.

The European Space Agency has described the wide variety of impacts that can arise as a consequence of space weather.

- Space: Astronaut radiation, satellite radiation damage, satellite solar cell degradation, satellite single event upset
- Atmosphere: Aircraft crew and passengers' radiation, HF radio wave disturbance, signal scintillation
- Ground: Decreased directional drilling accuracy, induced geoelectric field and current, geometrically induced currents in power systems

Of primary concern is the loss of power. Strong fluctuating currents in the ionosphere (essentially associated with the aurora) induce potential differences and electric fields in the Earth's surface, which can then couple into conducting infrastructure on the ground such as powerlines, pipelines and rail networks.

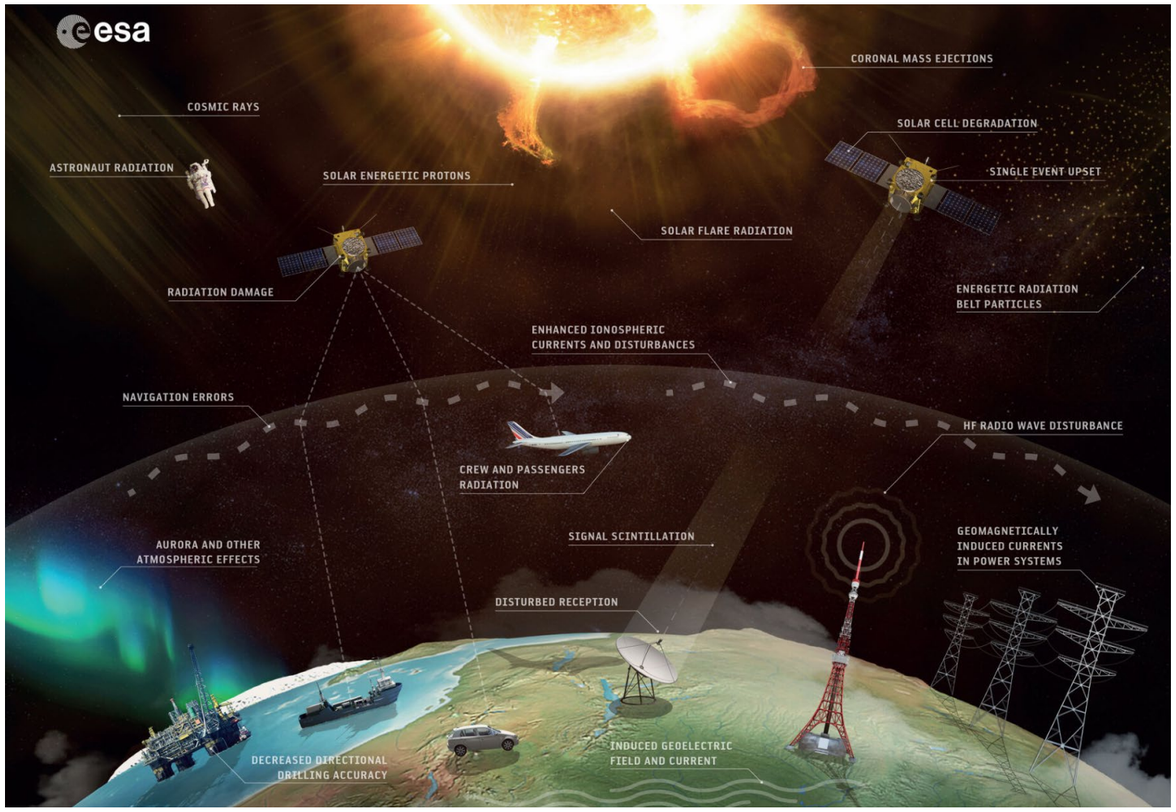

Of particular note here are the relatively famous events of 13 March 1989 in Quebec, where blackouts and transformer damage occurred as a result of a geomagnetic storm. The 2012 Royal Academy of Engineering report [7] suggests that 6 super grid transformers in England and Wales, and a further 7 in Scotland could be damaged and taken out of service as a consequence of severe space weather.

More recently, the Space Environment Impacts Expert Group's (SEIEG) 2022 Reasonable Worst Case Scenario [8] envisages that premature ageing, and damage of transformers could occur, but also that transmission system voltage instability and voltage sag could occur, with tripping of safety systems potentially leading to cascade failure of the transmission network and/or regional outages.

Another important area of impact is in Global Navigation Satellite Systems (GNSS) and position, navigation and timing (PNT) services (eg. GPS). GNSS can be disrupted by distortion to signals as a consequence of ionospheric disturbances driven by space weather. Outages could occur unpredictably and intermittently for several days during a major event, and the impact of this is still not well understood, particularly given the ever-increasing use of PNT services for a variety of downstream services.

("Space Weather: Risks, Challenges and Solutions", by Dr Jonathan Eastwood, Reader in Space Physics, Imperial College, London, in Safety Systems - the Safety-Critical Systems Club Newsletter, Vol. 30, No. 3, October 2022,)

912) Sham electromagnetic signatures for decoy battle tanks

The US has developed a decoy M1 Abrams tank which costs just $3,300 compared with $4.4 million for a real one and fits into a backpack when deflated. The latest decoy tanks and fake weapons carry sham electronic signatures to mislead aerial attackers.

("Decoys and dummies can help to win wars", by Ben Macintyre in The Times, Saturday April 16, 2022)

0.2 Purpose of this document

This part of IEC 61000 documents describes the main phenomena which affect the power quality of a modern Distribution Systems with high penetration of power electronics converters.

It has been focused on the following main aspects, as resonances in LV network, impact of increased number of power electronic converters, instability issues for the equipment to be connected to the LV networks.
Those new aspects, organized and described in the TR, may lead to new IEC specifications; that is why a state of the art on this topic was necessary.

913) EMI problems in power networks with high penetrations of power electronics equipment

EMC standards focus so far on harmonics aspects when connecting one device to a close to ideal network in terms of impedance and supply voltage distortion. However, additional phenomena may occur in modern, more complex networks with high penetrations of power electronics equipment, which can be related to resonances, high penetration and concentration of AC/DC converters as well as weak grids with low short-circuit powers. [Editor:– In other words, we now need to apply several more types of conducted mains immunity tests, to verify that equipment should work as intended.]

Consequently, the real network conditions can considerably deviate from the ideal conditions considered for the devices' design and tests. Several cases have been described in the report, which has shown that in particular under weak grid conditions, the behaviour of power electronics can deviate from its intentional behaviour. The presented cases and studies emphasize the fact that the extensive presence of static converters represents some risks in terms of stable and reliable operating conditions of the distribution grid at acceptable disturbance levels.

One key factor is the capability of converters to maintain stable operating conditions in any situation. The following factors will affect directly to the converter's controller stability:

Frequency Dependent Grid Impedance: The stability reserve for the output current controller is reduced in the case of a weak connection (e.g. long lines). Parallel resonances in Zh result in maximal impedance values.

Number Of Inverters Connected In Parallel: By connecting passive filters in parallel, the resonance is shifted towards lower frequencies, closer or into the bandwidth of control loops.

Voltage Harmonics Present On The Grid: Some controller topologies or controllers with unsuitable time constants can amplify the voltage harmonics present on the grid.

Synchronization With The Grid: The frequency bandwidth of the phase locked loop (PLL) is crucial for stability. In the case of high voltage distortion, synchronization can be lost.

Operation Point: A change of control strategies when a load is reduced from the nominal power can impair stability.

EMC Filters: The LCL output filter has resonance frequencies. In all cases, resonance can disturb control loops, depending on the impedance of the upstream network.

Controller's Topology And Tuning: Feed forward or resonant controllers behave very differently than more classical PID controllers.

Converter Switching Modes: The Pulse Width Modulation (PWM) or vector control process as well as switching frequencies can influence the harmonics, for instance on the neutral conductor.

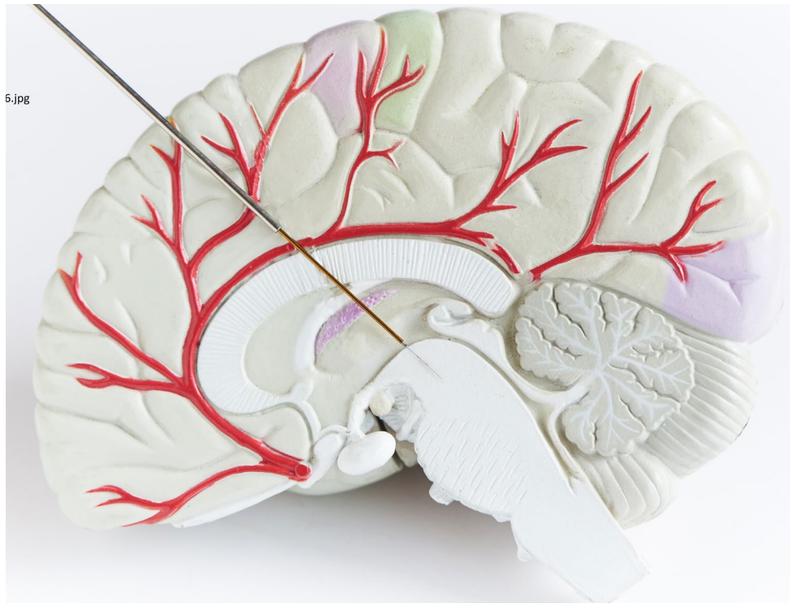

Delays: in measurements and digitization for vector control. Delays are crucial for the stability of a controller.

(Committee Draft of IEC TR 61000-2-15, Edition 1, "Electromagnetic compatibility – Part 2-15: Environment – Description of the characteristics of networks with high penetrations of power electronics equipment".)

914) "Brainjacking" with intentional EMI

The use of intentional EMI to effectively hack DBS (Editor:– Deep Brain Stimulation) systems has recently come under scrutiny with the discovery of a potential vulnerability in clinician programmers and the ability to access personal information about patients [56–59].

Beyond information theft, it is technically feasible for a third party to interfere with IPG to maliciously control brain implants; a process termed "brainjacking".

Unauthorized access could include interrupting stimulation, draining implant batteries and depending on the site of stimulation, impairing motor control, modulating reward pathways, impulse control emotions and affect, pain, off-target effects and potentially brain tissue damage. There are currently no reports of these incidences with respect to DBS however there are documented cases with other medical devices (insulin pumps, cardiac pacemakers, brain computer interfaces).

.....intentional third-party interference can theoretically undermine a patient's autonomy [61]. This includes alterations in reward processing in nucleus accumbens stimulation or impulse control in subthalamic nucleus stimulation. Such attacks can be categorized as passive ("listening" for information during normal transmission) which may result in disruptions in authentication or loss of confidentiality, or active (send or modify messages to the IPG) which can alter therapy and side effect profile of stimulation [62].

As DBS becomes an increasingly common treatment option for patients with various movement disorders and other neurological diseases, EMI and device malfunction, both intentional and unintentional become an important topic of discussion. Furthermore, given the ever-expanding number of indications/ applications for DBS, such as in the developing field of treatment of psychiatric disorders, one can easily anticipate the potential for devastating consequences should therapeutic efficacy be compromised or lost due to EMI. High likelihood (but not very severe) outcomes include transient ON/OFF switching of stimulation when passing through theft detectors or screening devices at security check-points if EMI exposure is not anticipated and devices not switched off beforehand. Less likely (but potentially catastrophic) outcomes would include irreversible injury to brain or human tissue.

Ultimately, research on EMI effects on patients with DBS devices remains relatively sparse. Furthermore, with respect to cybersecurity medical devices remain far behind the computer industry in protecting devices from hackers. It is a great practical concern which warrants further timely investigation. More comprehensive and current characterization is essential to improving DBS device design and patient outcomes. By

addressing the knowledge gap, this review represents one of the requisite first steps toward ultimately improving DBS system design, implementation, efficacy and safety with respect to EMI.

("Deep brain stimulation and electromagnetic interference" by Shervin Rahimpour, Musa Kiyani, Sarah E. Hodges, and Dennis A. Turner, in Clin Neurol Neurosurg. 2021 April ; 203: 106577. doi:10.1016/j.clineuro.2021.106577)

915) Partial discharges in HV substation caused comm's blackouts at airport

In January 2021, the Dutch Radio Communications Agency informed the European electricity transmission system operator, TenneT, that interference coming from one of the substations it managed and maintained was causing a communication problem between air traffic control and pilots on all incoming flights from the UK.

While initial audible and visual inspections revealed nothing abnormal, a partial discharge inspection conducted using the Fluke ii910 Precision Acoustic Imager immediately identified that corona discharge was responsible for the 10-20 second communication blackouts between ground staff and pilots.

916) The Impact of EMI on Wi-Fi

EMI in the Smart Factory: EMI can be a significant challenge for Wi-Fi users on the factory floor. Examples of EMI offenders in this space are walkie talkies, microwave ovens, refrigerator motors, and displays that can emit harmonic interference, especially within the 2.4-GHz band between channels 11 and 14. Poorly shielded cables also may interfere with Wi-Fi.
Believe it or not, Christmas tree lights and fish tanks that may be in factory offices oscillate on the same frequency as many Wi-Fi systems. Thus, they can be common causes of EMI—not just to Wi-Fi signals, but also internet connectivity in general.

An interesting fact is that EMI from cordless Wi-Fi phones also can be an offender that may interfere with hearing aids.

Radar-System EMI from Wi-Fi: The 5-GHz band includes Wi-Fi equipment that may cause EMI to technologies like Doppler and approach radar systems in close proximity (Fig. 2).

Radio devices like walkie-talkies, radio locators,

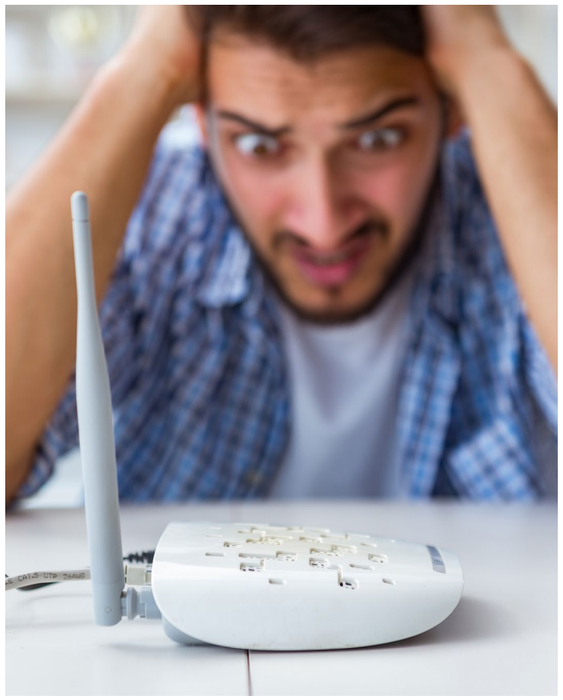

microwave ovens, and baby monitors can affect Wi-Fi signals by interfering with that frequency. These devices utilize a similar frequency to the one used by 2.4-GHz Wi-Fi.

Single-band routers will be more affected because they only operate at the 2.4-GHz frequency. In addition, older Wi-Fi specifications such as 802.11 b/g/n will be more impacted. Users can limit the effect of this by attaining a good dual-band or tri-band router.

More Solutions to Minimize EMI in Wi-Fi:

Wi-Fi users should consider upgrading their Wi-Fi to a device that's capable of using the 802.11ac frequency and has dual-band functionality. In other words, one that can broadcast on both the 2.5- and 5-GHz spectrum.

For current Wi-Fi devices, look into any firmware upgrades. Manufacturers are constantly finding ways to enhance the capability and performance of their devices by developing new software that runs them. Users can check regularly on their website for their model number and the latest firmware releases. These updates usually are free of charge.

Summary: Since Wi-Fi transmits over the airwaves, it will be much more susceptible to

interference than wired networks. There can be interference from a home's network or a neighbour's Wi-Fi, non-Wi-Fi wireless devices, microwaves, and even radar systems. Since there are many possibilities for EMI interference, tracking down or minimizing/eliminating the interference can be quite a task, but knowing where to start can help. This article will help designers and users understand EMI effects on Wi-Fi systems and it offers ways to minimize the problem.

917) Pacemakers Study Confirms Cell Phone Interference

- Research confirms cell phones and smart watches should be kept at least 6 in. away from implanted medical devices such as pacemakers.
- Magnetic safe mode can be triggered accidentally from strong magnetic fields greater than 10G.
- There's no need to steer clear of electric cars if you have a pacemaker.

Pacemakers come with an FDA warning: Avoid interference between cell phones and smart watches and your heart device.

The concern for pacemaker wearers has been

whether electronic devices can interfere with their life-saving device. And for many years, pacemaker wearers have heeded the advice to keep cell phones at least 6 in. away from their implanted medical device. The same holds for large motors, such as cars or boats.

Now, investigators affiliated with the Center for Devices and Radiological Health (CDRH) at the US Food and Drug Administration have concluded a study that supports the FDA recommendation. The findings, reported in Heart Rhythm, validate that consumer electronic devices may create magnetic interference. Cell phones and smartwatches, the research confirmed, should be kept at least 6 in. away from implanted medical devices, in particular pacemakers and cardiac defibrillators.

("Pacemakers Study Confirms Cell Phone Interference" by Rehana Begg, August 2021)

918) Mobile phone interferes with car's automatic transmission

There was a famous case about 20 years ago when mobile phones became very popular. A Lexus equipped with an automatic transmission was suddenly behaving crazily. Why?

The wiring of the transmission was routed directly underneath the storage tray between the seats. Any incoming call of a mobile phone which had been stored there was confusing the transmission ECU.

A lengthy discussion with the EU Commission started at that time about whose fault it was because both claimed their product to be compliant with all requirements.

End of the story: the Commission stated they would never rule against typical user behaviour and Lexus installed some shielding between their storage tray and the transmission harness.

(Taken from a private communication with the Editor, dated 7th Nov 2022.)

919) Spread-spectrum emissions don't help digital communications and can make them worse

The potential interference of electric and electronic equipment with communication systems has been one of the main EMC concerns, starting from the earliest studies [1], which deal with radio communications in general, and [2], which deal with car receivers.

While the goal – i.e., avoiding interference – is always the same through the years, the players, i.e. the sources of interference and the potential victims, are continuously changing. This gives rise to new scenarios and EMC challenges, so that EMC requirements and electromagnetic interference (EMI) mitigation techniques cannot be regarded as fixed and/or universal, but need to be considered from a continuously evolving perspective.

The results discussed in Sect. IV suggest that SS cannot be regarded as a panacea to address interference with communication systems and can possibly worsen the interference potential of switching signals.

Based on the theoretical insight and the experimental results presented in this paper, the effectiveness of SS modulations in reducing the interference potential of disturbances is strongly related to the application scenario.

In particular, SS modulations help in complying with EMC standard requirements, and also help in avoiding or limiting interference with analogue radio and communication systems, which are the victim equipment targeted by the EMC standards. While considering digital communications, however, no improvement can be expected by the adoption of SS modulations and such modulations cannot be of help in solving real-world interference issues between switching mode power converters and/or digital circuits with digital data links.

In particular, the adoption of SS modulation can be even detrimental for digital communication systems adopting advanced coding schemes (e.g. PLC systems), where the worse EMI-induced capacity loss brought about by SS results in an increased BER.

From a more general point of view, it can be concluded that EMC requirements need to be always considered in the framework of a specific interference scenario, and the conclusions that can be valid for one scenario could be possibly not valid in other cases.

Nowadays, we are experiencing fast and radical changes in the electric and electronic systems arena, which are related to the development and the diffusion of new semiconductor technologies and applications (IoT sensor nodes [38] including EMI-sensitive amplifiers [39], wireless and wired Digital Data lines [26], the smart grid [28], Digital Radio/TV [25], Electric Vehicles [40]), different EMC challenges are emerging, which require new research efforts, new countermeasures and possibly also new regulation requirements.

("Interference of Periodic and Spread-Spectrum-Modulated Waveforms with Analog and Digital Communications", by Paolo S. Crovetti and Francesco Musolino, in the IEEE Electromagnetic Compatibility Magazine, Vol. 11, Quarter 2, 2022)

920) Cees Keyer, 1963 – 2022. An icon in the Dutch EMC community

Cees Keyer was a very special person, an icon in the Dutch EMC community, has sadly left us. He inspired many young engineers, and he would regularly go against the grain. Not to provoke, but to provide food for thought. He always refused to wear a tie, except during this Ph.D. thesis defence, which took place only a few months before his cancer diagnosis.

His passion was also evident during measurements in the field. He was up on roofs with solar panels, and down in between the potatoes, the cows, and the pigs. Solar panels were first installed by farmers, so that is where the first problems arose.

Cees' research was, and remains, highly relevant. Everybody is familiar with the smart meter, but the interference of LED lights and solar panels on critical radio communication, such as C2000, was also researched by Cees back in 2013.

Recently, the Telecommunication Agency published its annual report, and articles appeared in the media stating, "Solar panel threatens communication emergency services due to interference signal." Cees already knew this.

He told us, back in 2013, at the EMC Europe conference. During an inspiring presentation in front of a large audience, a question was asked at the end, "How can you prevent the interference caused by LED?" Cees replied: "Use candles!" This resulted in such laughter that the organizing committee created a new prize on the spot: "The most entertaining presentation award."

When the malfunctioning LED lights riddle was solved, Cees continued working on the smart meter, which turned out not to be so smart after all. Thanks to Cees' classic dimmer, we were able to trace the cause of the smart meter's faults.

("Cees Keyer, 1963 – 2022", in: "Completed Careers" by Alistair Duffy, Associate Editor, 2022 IEEE Electromagnetic Compatibility Magazine, Vol. 11, Quarter 2, . For a downloadable list of Cees' IEEE papers)

What's in a Name?

I'm Always Battling Against Engineers And Their Managers Who Think That Calling A Conductor A Different Name Makes It Behave Differently.

So, they assume that anything called earth or ground (or 'deck', 'chassis', 'frame', etc.) must therefore have zero Ohms (i.e. 0.000000 Ohms) at any frequency. Even if it is a green/yellow striped wire 2 metres long.

And they assume that any metal (or good conductor) that is not called a shield, doesn't behave as a shield and must therefore allow RF currents to flow from one of its sides straight through to the other.

And they assume that only things that are called antennas behave like antennas. i.e. coupling RF energy to/from the medium they are in (usually air).

It doesn't help that SPICE simulators make all the above assumptions too because they ignore the intrinsic nature of electromagnetic propagation – choosing instead a grossly simplified view.

SPICE's approach is the same as almost all circuit-design textbooks, which ignore the fact that electrical currents cannot ever be separated from local near-fields and vice-versa. And of course, local near-fields are caused by, or cause far fields.

These days, with ordinary low-cost digital semiconductors switching in well under 1ns, and the environment becoming saturated with RF up to 6GHz (until 5G gets going properly, when it will be up to 28GHz, at least), this old-fashioned circuit design approach guarantees that anything designed using this approach will not function reliably in real life, and will not comply with any EMC regulations imposed by the developed nations, without an awful lot of post-design messing around (usually called 'development').

But in fact: anything made of metal (or any reasonable conductor), whatever name we give it:

- **Always shields one of its sides from the other to some degree,**

– as a function of frequency due to its skin effect.

- **Always has intrinsic series inductance,**

– which is why superconductors can only achieve zero (i.e. 0.000000) Ohms at DC (0.0000Hz) and above that frequency any conductor always has a non-zero impedance.

- **Always has mutual inductances with other conductors,**

– which means current changes in one conductor always couple voltage changes into any other, to some degree.

- **Always has intrinsic 'space charge' capacitance,**

– which means that changing the voltage on any conductor, even when it is not part of a circuit, always requires current to charge/discharge it.

- **Always has mutual capacitances with any/all other conductors,**

– which means voltage changes on one conductor always couple current changes into any other conductor, to some degree.

- **Always acts as an antenna,**

– either intentionally or unintentionally – there is no such thing as a conductor that is not also an antenna (although it might be a very poor one), i.e. that changes in the voltages and currents on/in any conductor always create local near-fields (= transmission), and vice-versa (= reception).

These days, not taking these real-life issues into account in all hardware design, guarantees unpredictable delays in time-to-market, unpredictable but always an excessive cost of manufacture, and unpredictably increased financial risks.

It all sounds very complex and difficult, but it isn't.

I've been teaching the correct approach to practising engineers since the mid-90s, with 100% success for those who learnt and applied what I told them.
visit here for more details

Brexit and CE Marking

Freedom Of Movement Of Technical Goods

- Structure of CE Marking legislation
- What are the three Brexit agreements
- Immediate effect of Brexit on EU law
- Differences between CE and UKCA Marking
- Northern Ireland and UKNI

The Structure Of The CE Marking Legislation

- Article 100A of Treaty of Rome - 1992
- New approach directives (indirect effect)
- Safety legislation
- Meeting the requirements for compliance
- Conformance Assessment and Essential Requirements
- (Mostly) self certification
- Declaration of Compliance
- Cumulative legislation

Interaction With Standards

- Conformance Assessment
- CE Marking entirely based on standards
- EU standards, international standards, national standards
- How many EU standards are needed?
- Based on (published) European Harmonised Standards (CEN, CENELEC; ETSI)
- Now (in the UK) BSI standards are most relevant
- Membership of CEN, CENELEC, ETSI
- But, in practice ISA, IEC, ITU

The CE Marking Legislation

- Electromagnetic Compatibility
- Machine Safety
- Mobile Machines and Lifting Equipment
- Low Voltage Equipment
- Medical Devices
- Pressure Equipment (ATEX)
- Toy Safety
- Construction Products
- Personal Protective Equipment
- Non Automatic Weighing Instruments
- Gas Appliances
- Active Implantable Medical Devices
- In Vitro Diagnostic Medical Devices Directive
- Telecommunications Terminal Equipment

What Are The Brexit Agreements

- Withdrawal Agreement of 24 January 2020 between EU and UK
- Agreement between Iceland, Liechtenstein and Norway (UK and EU) of 28 January 2020
- Trade and Cooperation Agreement of 25 December 2020 between EU and UK
- Not a "Comprehensive Economic and Trade Agreement" with Member States
- Enforcement issue, because may not directly bind a (member) state

Immediate Effect Of A "Hard" Brexit

- A "Hard Brexit": no transition or other arrangements
- Existing law applies
- Authorised Representative
- If not appointed => importer into EEA

Nothing Has Changed Everything Has Changed: Interpretation

- Why most European Law is now irrelevant
- 60% law is European law
- Interpretation on a European basis
- The European Court of Justice
- Significance of official languages

Why Was The European Position Relevant?

- Interpretation on a European basis
- The European Court
- Defence to a prosecution
- Position if national law is not the same
- Francovitch
- sue the government for damages!
- Importance of decisions in other states
- The UK Court now ignore EU interpretations

Metrification And Brexit

- No transition or other arrangements
- Except for 2 pages of GDPR
- SI 696/19: The Product Safety and Metrology etc. (Amendment etc.) (EU Exit) Regulations 2019
- Hard Brexit => existing law applies
- Concept of an "authorised representative"
- Compare GDPR
- Authorised Representative, importer
- Concepts of "Notified Body",

First Use In EEA Machine Safety Directive

- Phrase used is "placed on the market … or put into service"
- "'placing on the market means making available for the first time in the [EEA]
- [machinery or partly completed machinery] with a view to distribution or use,
- whether for reward or free of charge"
- " 'putting into service' means the first use,
- for its intended purpose, in the [EEA]
- of [machinery] covered by this Directive
- Essentially the same under Medical Device Directive

First Use In EEA: Toy Safety Directive

- Phrase used is (only) "placed on the market"
- 'placing on the market means
- "the first making available of a toy
- on the [EEA] market"

First Use In EEA: EMC Directive

- Phrase used is "placed on the market … or making available on the market"
- 'placing on the market means
- "the first making available of apparatus
- on the [EEA] market"
- 'making available on the market means "any supply of apparatus
- for distribution or use on the [EEA] market
- in the course of commercial activity,
- whether in return for payment or free of charge;"

First Use In EEA: EMC Regulation

- Phrase used is "placed on the market … or making available on the market"
- 'placing on the market means
- "the first making available of apparatus
- on the [EEA] market"
- 'making available on the market means "any supply of apparatus
- for distribution, consumption or use on the [EEA] market
- in the course of commercial activity,
- whether in return for payment or free of charge;"

First Use In EEA: General Effect Of Directives

- Words used are not retrospective
- Article 40 of EFTA Agreement: burden of proof
- But meaning differs between countries
- "Supply" example
- Ireland (and UK): extends to "offering or exposing for sale or inviting an offer to purchase"
- Netherlands: exact words of Directive

First Use In EEA: General Effect Of Directives

- Words used are not retrospective
- Article 40 of EFTA Agreement: burden of proof
- But meaning differs between countries
- "Supply" example
- Ireland (and UK): extends to "offering or exposing for sale or inviting an offer to purchase"
- Netherlands: exact words of Directive

Obligations Of Individual Users

- "Put into EMC example
- A person must not make equipment available on the market or put equipment into service unless it complies with the essential requirements " UK
- A person shall not … put into service equipment … unless the equipment concerned meets the essential requirements " Ireland

EMC And Safety

- TFEU Article 114
- Includes freedom of movement of goods
- Concerning health, safety, environmental protection and consumer protection
- EU position (is and was) safety related
- Under UK law
- Original (1992) position of DTI
- Current position of Department for Business, Energy & Industrial Strategy
- Actual UK legal position

Authorised Representative In EEA

- " 'authorised representative' means any natural or legal person
- established in the Community who has received [and accepted]* a
- written mandate from the manufacturer
- "to perform on his behalf all or part of the obligations and formalities connected with this the Directive" (Machine)
- "to act on his behalf in relation to specified tasks" (Toy Safety, Medical Devices, EMC Directives

* Not in EMC Directive

Northern Ireland Protocol

- Part of the Withdrawal Agreement
- Provisions of Protocol
- Apply "to and in the United Kingdom [but only] in respect of Northern Ireland" Article 5(4)
- Annex 2 to Protocol includes:
- General Product Safety Directive
- CE Marking legislation

Northern Ireland 1

- Goods manufactured in Northern Ireland
- Manufacturers based in NI continue to follow the CE Marking regime
- Manufacturer can just design and apply his trade mark
- Must apply the CE Marking
- Choice
- Use a UK Notified body
- Use an EU Notified body
- Can always then import from NI into GB

Northern Ireland 2

- Where a UK Notified body carries out conformity assessment:
  - Must apply CE Marking
  - Also apply UKNI Marking
- Cannot sell into the EEA
- Where an EU Notified body carries out conformity assessment
  - Use (only) CE Marking
  - Guarantee of unfettered access

Northern Ireland 3

- But excludes EU recognition of "technical regulations, assessments, registrations, certificates, approvals and authorisations" by UK or UK bodies
- Authorised representative for NI cannot be in GB
- Authorised representatives in NI cannot act for EEA?
- UK Guidance ambiguous because refers to "[EMC] regulations as they apply to NI"

Northern Ireland 4

- Gaming the system
- Northern Ireland manufacturers have unfettered access
- Includes a subsidiary/sister company who "designs and owns the trade mark"
- But "longer term qualifying regime in the course of 2021, with only businesses established in Northern Ireland benefitting from unfettered access"
- But need separate product traceability

Dai Davis - Solicitor and Chartered Engineer
Partner, Percy Crow Davis & Co
Contact information - Tel: 07785 771 721
Email: mail@daidavis.com

Filter Optimisation For High Power Converters

An Example Of Modelling Including Enclosure Parasitic Effects

EMC Filter Simulation

A ‘bad’ filter based on a topology used in an automotive on board charger was simulated.

Including Enclosure Parasitic Effects

The model included parasitic effects of the PCB and enclosure using FEA in Ansys Q3D.

Validation Against Measurement

The model was validated against measurement on a prototype.

Filter Circuit Diagram

Circuit diagram of the filter topology to be simulated

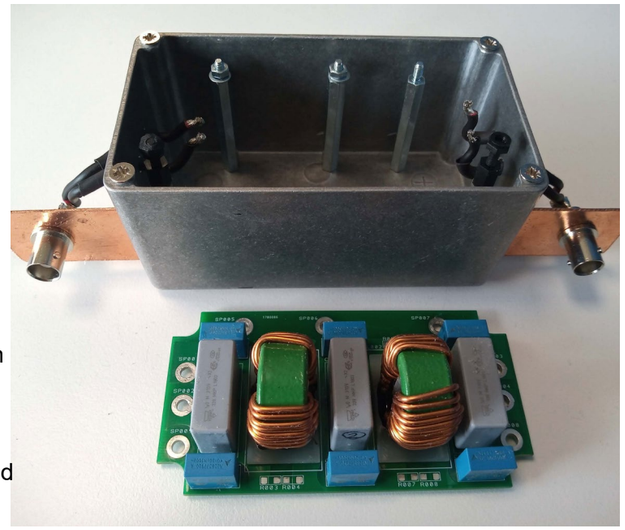

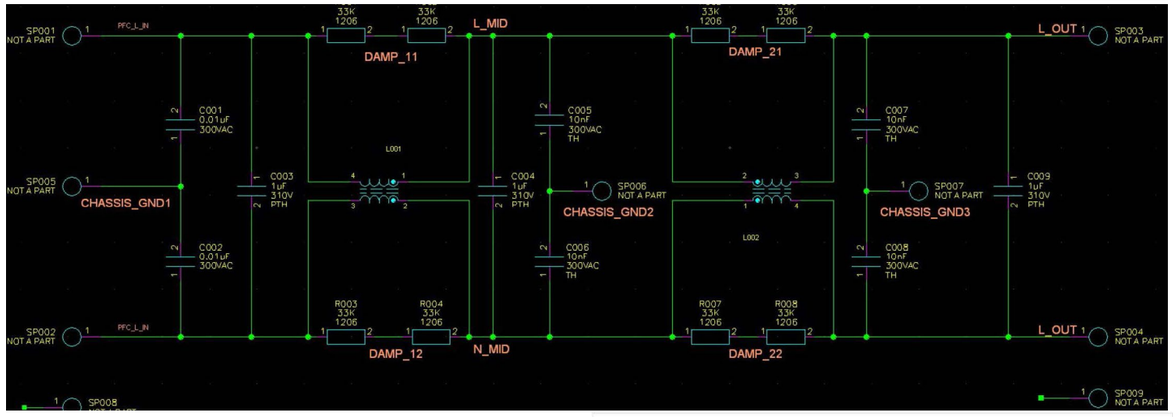

Capacitor Models

Component Parasitic Effects Included

The X and Y capacitors were modelled using a series R-L-C model to include parasitic inductance and ESR.

Model Fitting

The model parameters were adjusted to match manufacturer data.

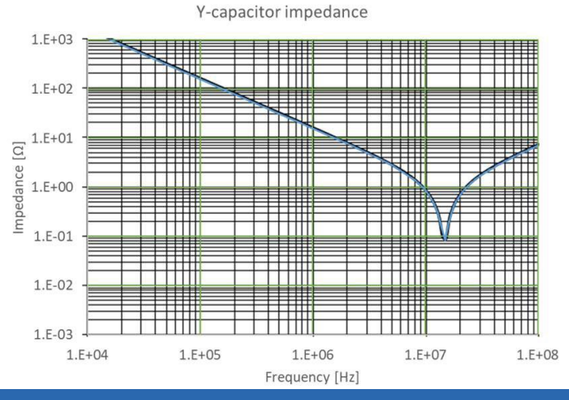

Common-Mode Choke Model (Part 1)

Frequency Dependence In Common-Mode

The frequency dependence of inductance and resistance of the common-mode choke in the common-mode was modelled using complex permeability data for the ferrite material.

Differential Mode

Differential mode attenuation was not modelled in this piece of work.

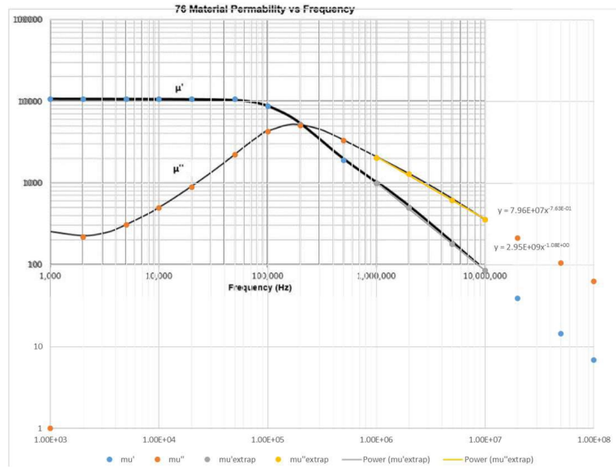

Common-Mode Choke Model (Part 2)

CM Choke Model Using S-Parameters

Four-port S-parameters were derived and formatted into a Touchstone file to give a means of importing frequency dependent CM choke impedance into the simulator.

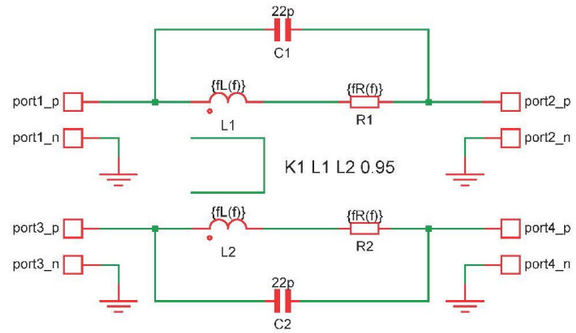

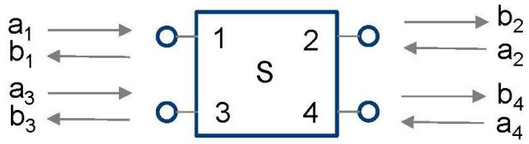

$$b = \begin{pmatrix} b_1 \\ b_2 \\ b_3 \\ b_4 \end{pmatrix} = S.a = \begin{pmatrix} S_{11} & S_{12} & S_{13} & S_{14} \\ S_{21} & S_{22} & S_{23} & S_{24} \\ S_{31} & S_{32} & S_{33} & S_{34} \\ S_{41} & S_{42} & S_{43} & S_{44} \end{pmatrix} . \begin{pmatrix} a_1 \\ a_2 \\ a_3 \\ a_4 \end{pmatrix}$$

PCB Model

PCB Layout And Export To Siwave

The PCB was laid out in Mentor Xpedition Layout and exported to ODB++.

PCB Import Into Siwave

The ODB++ file was imported into Ansys SIwave and configured with contact points for use when exported to Ansys Q3D for integration with the enclosure model. PCB FEM simulation is possible in SIwave, however, Q3D was used here to allow this integration with the enclosure model.

PCB Export To Q3D

The PCB was then exported to Q3D for integration with an enclosure model.

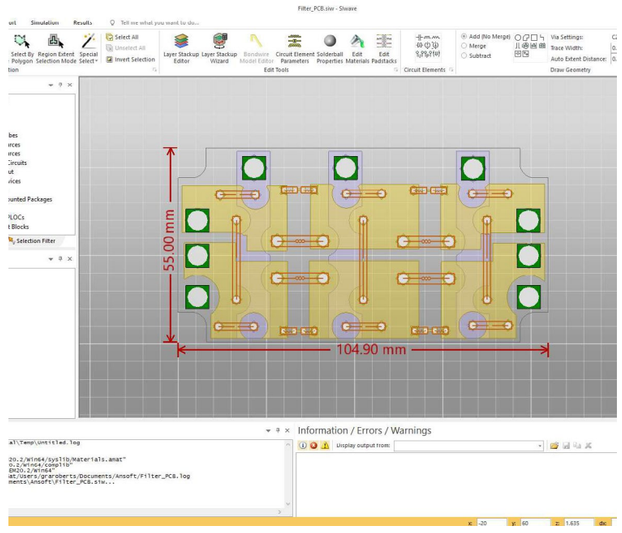

Enclosure Model

Enclosure In Q3D

An ‘off-the-shelf’ enclosure was selected and modelled in Ansys Q3D. Representations of brass stand-offs were added.

Why This Odd Arrangement?

An enclosure with long stand-offs was chosen to accentuate the problems inherent with using conduction via stand-offs and the enclosure as a current path in a filter rather than, for example, a good continuous ground plane on the PCB.

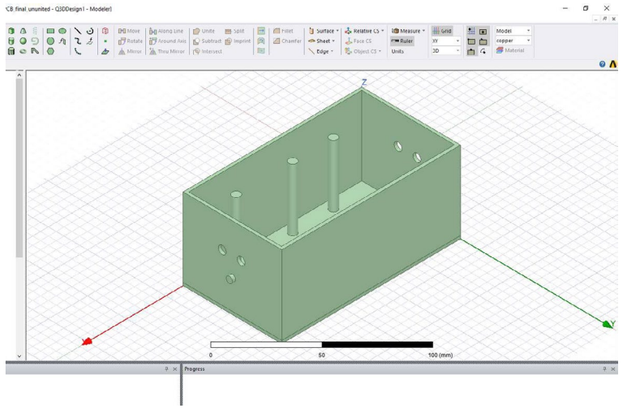

Combined Enclosure And PCB Model

Incorporation Of PCB Into Enclosure

The PCB model exported from SIwave into Q3D was positioned inside the enclosure, making contact with the stand-offs.

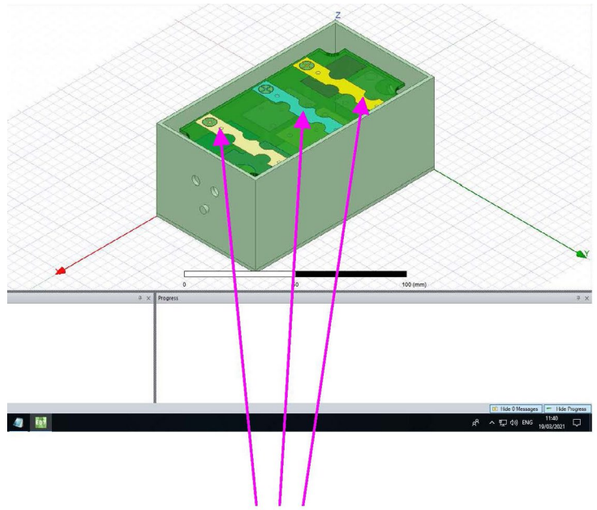

Discontinuous ‘grounds in contact with stand-offs.

Connections For Top-Level Model

‘Sources’ and ‘sinks’ were configured on each conductor for connection of the lumped models of capacitors, CM chokes, source and load.

Simulation And S-Parameter Export.

A frequency sweep was run, resulting in a simulation of parasitic resistance, inductance and capacitance inherent in the combined enclosure, PCB and stand-offs. This data was exported as a 32-port S-parameter file.

Top-Level Circuit Model

Incorporation Of All Model Components

The lumped component capacitor models, S-parameter models of common-mode chokes, S-parameter model of combined PCB, enclosure and stand-offs and a lumped model of 50Ω source and load were combined into a top-level circuit model.

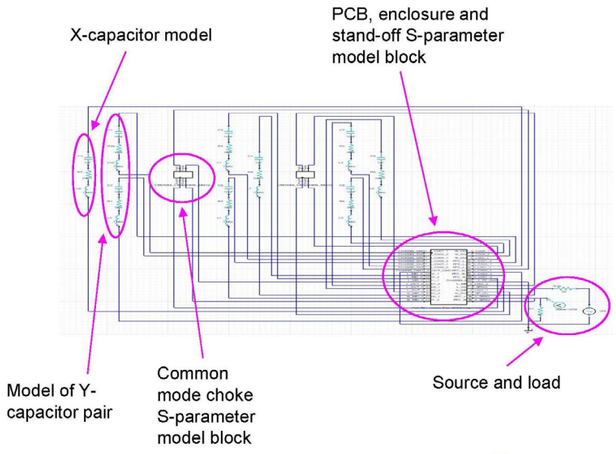

Prototype

Prototype With Measurement Connections

A prototype was built. BNC connectors were mounted in copper brackets for connection of the filter in common mode, i.e. with both live and neutral both connected to the centre pin of the corresponding BNC connector, using the enclosure as the ‘ground’.

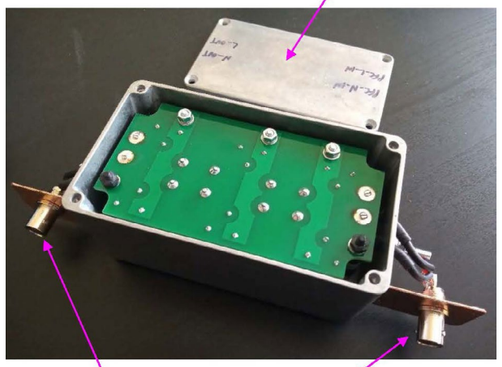

Why Not Use PCB Mounted BNCs?

The intention was to inject noise in a manner similar to the real application, via wiring carrying the noise currents, not by an intimately connected PCB mounted BNC connector.

Measurement

Prototype Measurement

A signal generator and spectrum analyser controlled by EMC32 were used to measure the filter attenuation versus frequency. Short coaxial cables were used and normalisation was performed as part of the measurement to compensate for cabling and other signal path attenuation.

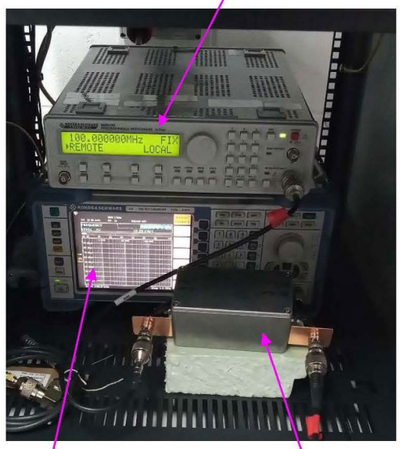

Measurement vs Simulation (Part 1)

Simulation

Simulations were performed using both the full model (green trace) and a model with the enclosure, PCB and stand-off model replaced with ideal connections (blue trace).

Ideal vs Full Simulation

The ideal and full simulations match identically up to ~400kHz, suggesting that enclosure, PCB and stand-off parasitic effects are not significant below this frequency. Above 400kHz, the effect of the enclosure model becomes apparent.

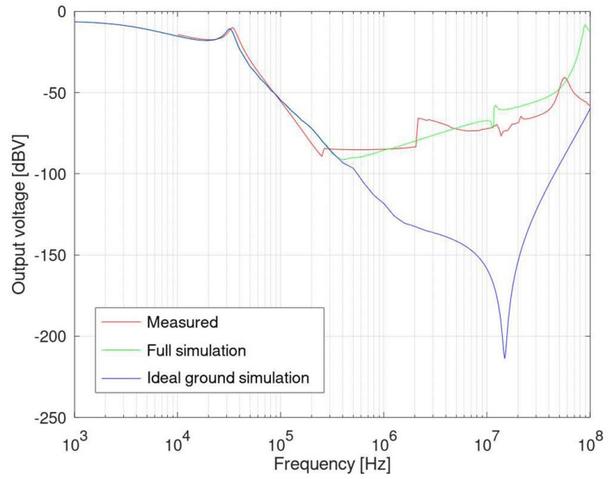

Measurement vs Simulation (Part 2)

Full Simulation vs Measurement

The match between the full model and simulation is satisfactory up to ~300kHz.

Between 300kHz and 2MHz there is an anomaly which is probably explained by insufficient measurement resolution in the experimental setup.

From 2MHz upwards, the model appears to capture the general trend of reduced attenuation, given the presence of enclosure, PCB and stand off parasitic effects.

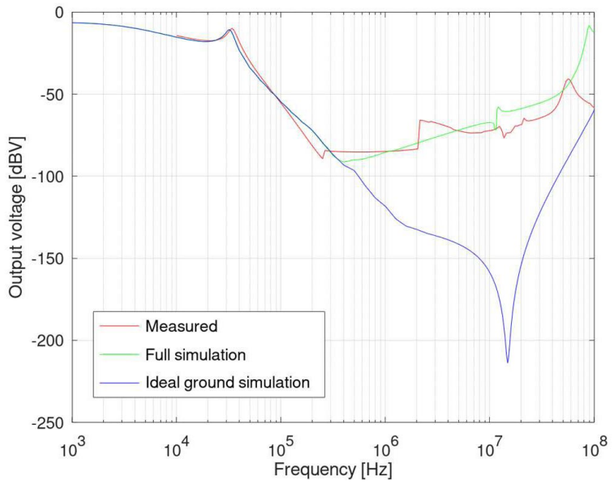

Measurement Vs Simulation (Part 3)

Approximate Reasoning

For approximate comparison a rectangular loop of 40mm x 40mm has an inductance in the region of 100nH.

These dimensions roughly represent the loop formed by the enclosure, the PCB and a pair of stand-offs forming part of the poor grounding structure in this design.

At 400kz a 100nH inductor has a reactance of ~0.25Ω, i.e. its impedance is starting to become significant compared to a good ground plane.

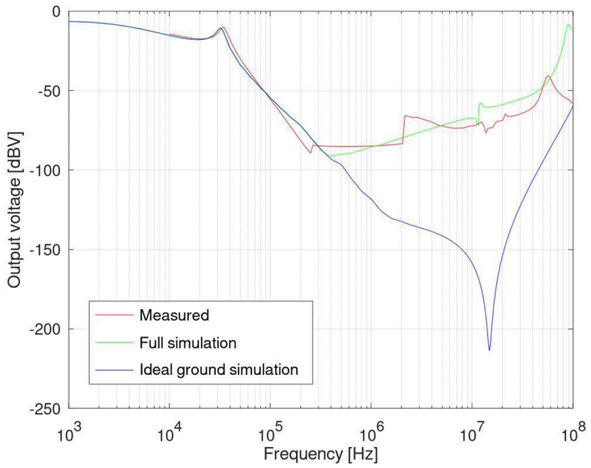

Conclusions

Filter Simulation Including Enclosure

An outline of a method used to simulate a filter including its enclosure has been given.

Match Between Simulation And Measurement

The match between simulation and measurement is reasonable but requires further investigation has given the differences observed and crude measurement method.

Further Work

This baseline model can be used to rapidly optimise the filter design in a simulation environment.

Graham Roberts MEng (Hons) PhD CEng INCE MIET - EMC and Compliance International Presentation 22nd March 2022.

TURNTIDE®

IEEE EMC Society No Longer Supports iNARTE

Proposal to the EMC Society Board of Directors

The EMC Society (EMCS) is the premier organization associated with EMC and EMI in all its many facets and strives to develop and stay on the cutting edge of technology to ensure the performance of a wide range of components, subsystems, and systems, as well as the health and safety of societies world-wide. Because of this, the EMCS has been dedicated to helping its members maintain a high level of knowledge and competency through a variety of means, including its ongoing national and international symposia, regional events, distinguished lecturer series, annual tutorials, and the Global University, offered at the annual symposia.

The EMC Engineer certification process was established by NARTE in 1990 to identify those with the necessary background and experience to be as certified EMC engineers. The original NARTE merged in 2012 with the Registrar Accreditation Board and Quality Society of Australasia (RABQSA), later known as Exemplar Global (EG). In 2016, EG and the IEEE EMC Society agreed to a Memorandum of Understanding (MOU), (attached), with the goal of enhancing the validity and value of the iNARTE EMC certification process.

However, since entering into the MOU, EG's EMC certification process has become less rigorous, raising quality concerns within the EMC Society. An ad hoc subcommittee of EMCS technical committee TC1 was established by the EMCS board in April 2022, to develop recommendations to strengthen the certification program.

The subcommittee drafted a letter to be sent from EMCS President Vignesh Rajamani to EG CEO Andrew Baines, expressing the EMC's concerns. After reviewing the letter with the help of the IEEE legal staff, President Rajamani sent the letter to Mr Baines. Mr Baines's reply made clear that EG did not see a concern, and that in his view the certification program was the "sole responsibility" of Exemplar Global.

Given this background, the subcommittee recommends that the EMCS board take the following steps:

1. Terminate the current Memorandum of Understanding (MOU), because:

a. The existing MOU (attached) is interpreted by EG to mean that EG has "sole responsibility" for the accreditation program.

b. The EMC's understands the meaning of the MOU to be that the review and relevance of the qualifying exam be the purview of the EMCS, but EG is now laying claim to it being its "sole responsibility."

c. Therefore, the requirements of the MOU, assigned, are not being met and it is clear that EG does not intend to abide by the MOU requirements with respect to EMCS involvement.

2. Select an accrediting body to act as an administrative agent and certifying body that would be responsible for certificate recordkeeping, collection of fees, planning examination dates and locations, conducting the initial examination and collecting the information for subsequent recertification, and promoting the value of certification.

3. Assume responsibility for the certification requirements and examination format and questions. Establish a question database for the exam within the EMC's, maintained by a standing committee of experienced EMC engineers appointed by the EMC's board. That committee would be responsible for assure questions are EMC-relevant and in step with current technology.

4. Establish basic certificate renewal requirements. Currently, only the payment of a renewal fee to EG is required, with no evidence of ongoing EMC activity, training, or employment.

5. Application and renewal fees are to be shared between the administrative contractor and the EMC's. The EMC's share will defray the expenses incurred to maintain the examination database (a secure server, clerical staff to organize records, paying the people who create the questions, etc.)

6. Further, make clear to existing certificate holders, as well as the EMC community at large that the IEEE EMC's is longer associated with the current iNARTE certification program.

The subcommittee is researching alternate certifying bodies that we may wish to contract with to develop a certification program and is working on a revised qualification and examination process to be recommended to the EMCS board. Further, we know that changing or severing the relationship between the EMC's and EG will be a cause of concern for the engineers and technicians who currently hold certifications. For that reason, the subcommittee is also working on recommended steps to smooth the transition from the existing iNARTE program to one that is revised and improved. Please note that the name of the new program will not be iNARTE, but some yet to be determined program name that is consistent with IEEE branding requirements, and that should be trademarked to establish it as its entity.

To assist the board in debating and making these changes, the subcommittee proposes the following draft motions for your consideration.

Motion 1: The IEEE EMC Society will terminate its MOU with Exemplar Global, Inc., and formally end its association with the iNARTE EMC certification programs.

Note that the actual termination of the MOU requires a written notice to Exemplar Global Inc., 30 days prior to the actual termination date.

Motion 2: The IEEE EMC Society Board of Directors (BOD) will establish an ad hoc committee to develop a detailed proposal outlining a new certification for EMI/EMC engineers and technicians. The new certification will have requirements mirroring those of Professional Engineer (PE) licensing including education and experience requirements, a licensing exam, and continuing education requirements for renewal. The proposal will be brought to the board for consideration at its Spring 2023 meeting.

Motion 3: The Board of Directors (BOD) directs the ad hoc committee established by Motion 2 to identify prospective certifying bodies that the EMCS could partner with to develop an EMC certification program. Additionally, the ad hoc committee will prepare a Request for Information (RFI) which can be sent to the certifying bodies at the direction of the Board.

Motion 4: The Board of Directors (BOD) directs the ad hoc committee established by Motion 2 to develop a roadmap that can be used to establish a new certification program consistent with the principles presented to the Board of Directors (BOD) in the current ad hoc committee's recommendations on addressing the situation with the existing iNARTE certification.

iNARTE membership is a very big deal if you are working in the EMC industry in the USA, Korea, or Japan, but has never been adopted with any enthusiasm in Europe or the UK.

The 'Elephant In The Room'

Some senior E3 positions in companies and other organisations make continuing iNARTE membership a condition of employment, so the fact that (as the above proposal states):

"…EG's EMC certification process has become less rigorous, raising quality concerns within the EMC Society…" this means that the people in those positions may be not as competent or knowledgeable in E3 as their employers assume.

I understand that the phrase "…less rigorous…", in the above proposal, means that annual iNARTE recertification requires nothing more than paying the fee! There are no requirements at all for demonstrating any professional development activities or passing any examinations (e.g. in new topics), such as are commonplace in institutions that license professionals.

This is worrying, especially when coupled with the fact that – in the committee's view (and, I am told, that of some senior EMC Society members, over several years) – the iNARTE examination has not been kept up to date over recent years that have seen massive developments in electronic technologies, plus massively increased adoption of electronics in all applications, including safety-related and safety-critical systems.

EMC and EMI have traditionally been regarded as little more than functional nuisances, but these days most of our lives, and livelihoods, depend on the correct functioning of increasingly-advanced electronics that are increasingly susceptible to EMI.

Visit www.emcstandards.co.uk/emiemc-risk-management for more on this issue, especially: www.emcstandards.co.uk/why-do-we-need-an-ieee-emc-standard-on-managing and: www.emcstandards.co.uk/its-emc-jim-but-not-as-we-know-it-incompliance.

Where such E3 professionals have responsibilities for products (e.g. aircraft), equipment, systems or installations for which EMI could increase functional safety; environmental; reputational; or other risks – their employers might be unwittingly exposed to huge financial and reputational risks under product liability laws.

The Meaning Of E³

E3 (sometimes written as E3) stands for Electromagnetic Environmental Effects, and embraces all EMC/EMI issues, including at least the following:

- Electromagnetic Compatibility (EMC)
- Electromagnetic Interference (EMI)
- Electrostatic Discharge (ESD)
- Electromagnetic Shielding
- Electromagnetic Pulse (EMP)
- High Intensity Radiated Fields (HIRF)
- Precipitation Static (P-Static)
- Indirect Effects of Lightning (IEL)
- RADHAZ (HERO, HERP, HERF)
- Electromagnetic Vulnerability (EMV)
- RFID Vulnerability to Electromagnetic Energy

Possible Damages Under Product Liability Laws

In the EU, some Member States have limited the maximum liability in civil cases under the Product Liability Directive, to 70 billion EUROs. Yes, billions, not millions.

However, other EU member states, and the UK, have no upper limit on damages that can be awarded in product liability cases.
The USA also sets no upper limit on liability, under its product liability laws.

The possible damages are intentionally set high, so that even the largest organisations in the world have to take notice, and not treat paying legally-awarded damages as being just one of their many operational costs.

What Next?

The "…ad hoc subcommittee of EMCS technical committee TC1…" mentioned in the above

proposal, has discussed what should be done now that Exemplar Global's iNARTE EMC professional certification is not supported by the IEEE EMC Society (EMCS).

At present, the idea of the IEEE EMCS creating a new professional EMC/EMI certification programme from scratch, in-house, is not finding many supporters due to its high costs of administration and long lead times. It should, of course, more than pay for itself when up and running, but getting from here to there could take over 5 years.

The current idea, therefore, is that the IEEE EMCS would set up a panel of experts to develop new examination questions, and everything else would be administered by third-party training and certification providers. For example, the idea is to recommend a programme of study based on the comprehensive EMC/EMI training courses already run and kept up to date by:

Todd Hubing, www.learnemc.com
Ken Wyatt, www.emc-seminars.com
Doug Smith, www.emcesd.com
Elya Joffe, www.stopemi.com/about-3.html
Keith Armstrong (me), www.emcstandards.co.uk/emcacademy and others, to be decided.

3rd-party training and certification providers would administer the programme, including organising and marking membership examinations; handling membership fees; supervising annual CPD, etc.

Exemplar Global intend to continue with iNARTE despite losing all support from the IEEE EMCS. So, when the IEEE EMCS scheme is in place, it is expected to include special 'transitional examinations' for existing iNARTE members who want to join it.

Exporting To The EU, And/Or To The UK

Manufacturers and other product suppliers based outside the EU must create specified 'Technical Documentation' for the CE-marked products they export into the EU, to demonstrate compliance with EU Directives. They may also need to use 'Authorised Representatives' based in the EU.

For the official details on how to comply with these EU requirements, visit: https://europa.eu/youreurope/business/product-requirements/compliance/technical-documentation-conformity/index_en.htm

Similar requirements apply to manufacturers and other product suppliers based outside the UK when they export UKCA marked products into the UK. For official details on the UK's requirements for Technical Documentation, and Authorised Representatives based in the UK, visit: https://www.gov.uk/guidance/ukca-marking-roles-and-responsibilities

There are many providers of Authorised Representative Services based in the EU (and/or in the UK) for use by companies based outside the EU (and/or outside the UK). Some of these providers might also be able to help ensure Technical Documentation is correct.

https://www.conformance.co.uk/our-services/authorised-representative-services

https://www.productapprovals.co.uk/authorised-representative.

https://www.qima.com/authorized-representative-service

https://www.complyexpress.com/authorised-representative

https://certification-company.com/services/authorised-representative

https://www.24hour-ar.com/
https://cleverrepresentative.eu/authorised-representative-as-a-service

And there's a list containing even more Authorised Representative Services, at: https://www.compliancegate.com/european-authorised-representative-companies/

But please beware! Sometimes people offering compliance services have been known to claim that certain things are legally required – when they are not – to try to charge more for their services.

So, I recommend that you visit the two official websites mentioned first on this page and learn the actual requirements for Technical Documentation and Authorised Representatives, to help you check whether the services you are being quoted for are legally required.

To help avoid being ripped off, please don't rely on 3rd parties to tell you what you need to know when exporting into the EU and/or into the UK. Always use official websites.

The Future Is Electric Let Us Safeguard It

In the previous editorial, it was stated that electrical power quality (PQ) and EMC were fundamental to the operational integrity and safety of all vessels, irrespective of type or class, especially as more electric and hybrid vessels come into service. It can be argued therefore that marine power quality and EMC should be a SOLAS (Safety of Life at Sea) issue. However, IACS and its members, do not agree with that statement.

The number of PQ and EMC problems on vessels mentioned previously (December 2019) is very worrying. It is obvious that the rules and their verification urgently require updating by IACS to meet the existing and new technical challenges required to safeguard seafarers and the financial investments of shipowners on whom their member's revenue streams depend.

Continuous PQ Monitoring

Some five years after the 2011 MAIB report (cruise vessel 11kV harmonic filter capacitor explosion) IACS implemented harmonic voltage (Uthd) monitoring for vessels with electric propulsion and harmonic filters (UR E24). Passive harmonic filters (LV or MV) can be problematic if not monitored or maintained correctly. There is confusion however as to whether vessels with active filters also must comply with this rule.

Fig 1 illustrates a comprehensive system providing cycle by cycle monitoring of all aspects of power quality. However, IACS UR E24 only stipulates harmonic voltage distortion (Uthd) monitoring at the point of common coupling (PCC); the main switchboard(s). Uthd monitoring alone is meaningless.

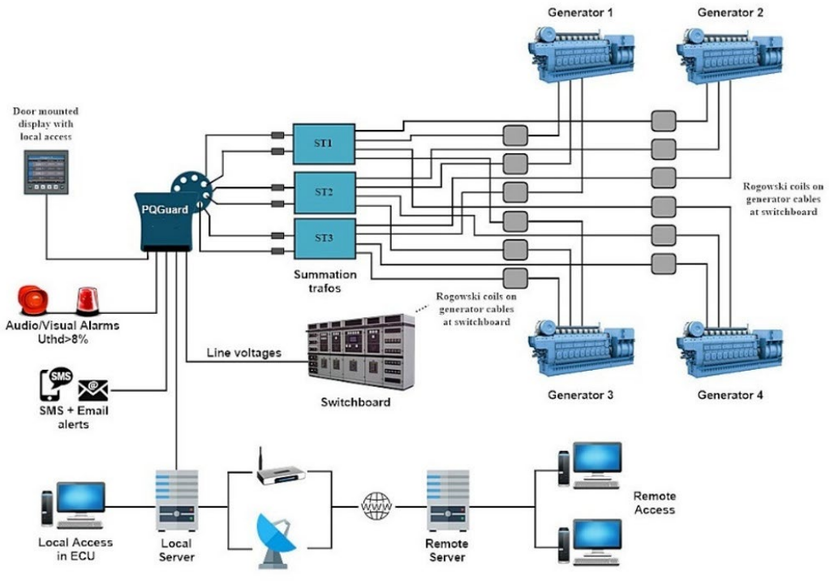

Fig 1: Typical application of PQGuard Excel recorder compliant with IACS (UR E24) at PCC - © Ian C Evans, February 2020".

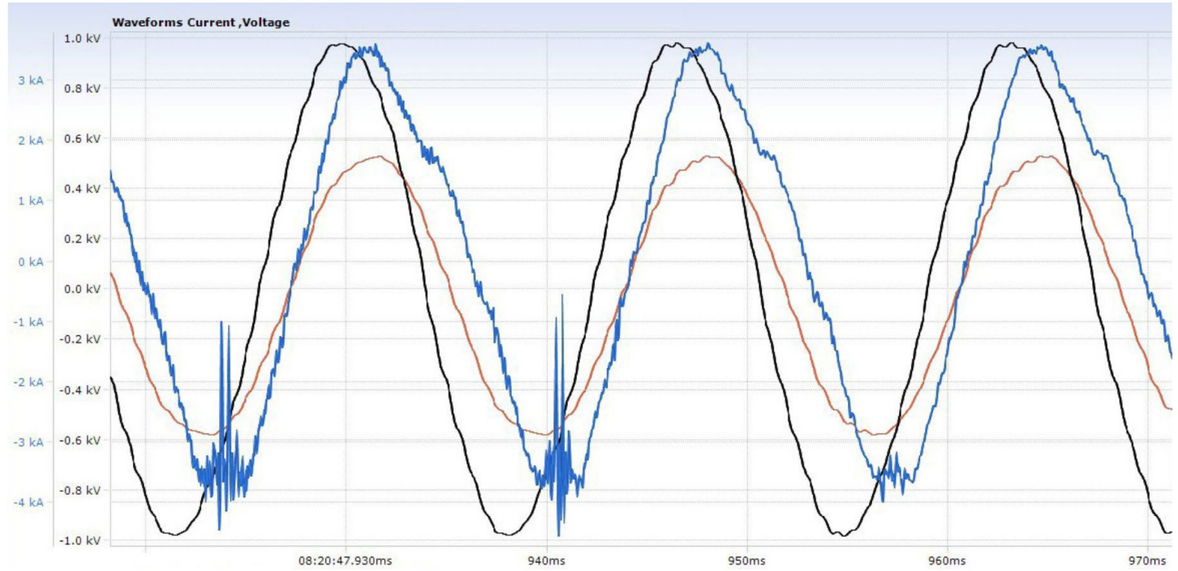

Fig 2: Impending diode failure on PWM thruster drive detected using cycle by cycle PQ monitoring - © Ian C Evans, February 2020".

The PCC-only approach is not valid for vessels which also have significant non-linear loads downstream (e.g. retrofitted multiple VFDs on cruise vessels) or on vessels with no electrical propulsion but significant non-linear loads. The vessels subjected to Harmonic Solutions Marine PQ surveys over the last 8-9 years, where the voltage distortion was well above the 8% Uthd rule limit (i.e. 32%-106% above), mainly utilised 24 pulse synchronous and cyclo converter drives. The excessive voltage distortions (Uthd) were due to i) the harmonic currents drawn by the converters ii) the switching voltage harmonics of the power devices and iii) the line notching. The frequency spectrums extended to over 10kHz on some vessels.

At present, vessels with multi-pulse main propulsion drives are exempt from UR E24. This illustrates that IACS are concerned with preventing capacitor explosions, and rightly so, but somewhat more relaxed in enforcing the 8% Uthd rule. Harmonics are one aspect of marine PQ. There are many others which can affect operational integrity and safety.

Continuous PQ monitoring plays a crucial part and should be installed on all vessels, irrespective of the type of electric propulsion and/or on conventional vessels with significant auxiliary drive loads with monitoring both at the PCC and at the switchboard level where auxiliary drives are fed from. Conventional PQ recorders can be utilised or the more sophisticated cycle by cycle devices measuring harmonic voltages/currents to 30kHz (500th harmonic), capturing every cycle and over 5500 PQ parameters. Cycle by cycle recorders are also an important aid in detecting impending failures (Fig 2).

Whether employed on PCC or distributed PQ monitoring, both conventional and cycle by cycle PQ systems offer the option of remote monitoring. Shipowners, for example, can monitor their vessels from anywhere in the world by their staff or via contracted PQ expert third parties who can assume the responsibility for PQ.

PQ issues on existing vessels
Excessive Background Uthd
On vessels with electrical propulsion and/or a large percentage of electric drive loads, the problem is often not the Uthd (total harmonic voltage distortion) produced by the loads downstream but the excessive Uthd due to the main propulsion (or other large) drive loads connected to the power system.

This causes serious problems for the operation and reliability of sensitive loads downstream, not only on commercial vessels but also on warships. However, as with EMI, it is not always possible, financially, physically or technically, to the treat main propulsion Uthd at the source. Other more affordable fixes therefore must be applied.

One non-invasive method of resolving the problem is to utilise 'sensorless' active filters in parallel with the respective transformer secondaries to harmonically isolate the source Uthd from the sensitive loads as shown (Fig 3). This example, a luxury yacht, experienced severe problems with 440V supplies when the 24 pulse propulsion drives were running. The installation of two 200A sensorless active filters reduced

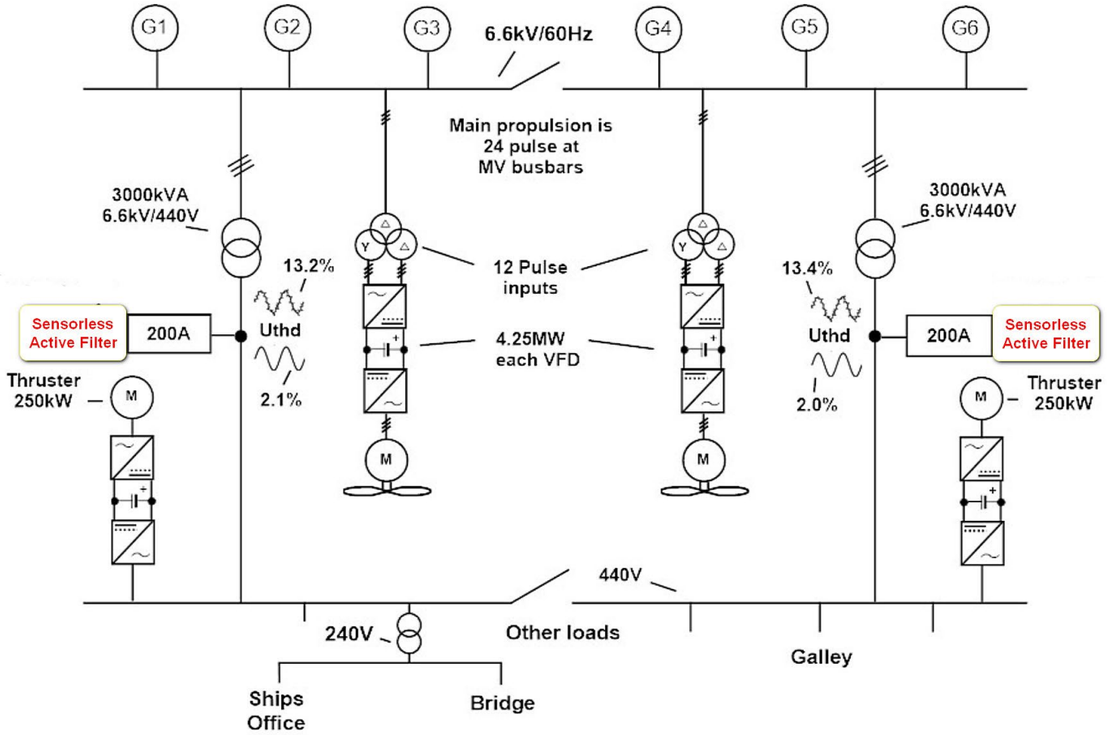

Fig 3: Sensorless active filters isolated the main propulsion Uthd (13.4%) from sensitive loads - © Ian C Evans, February 2020".

the Uthd at 440V from 13.4% to around 2% as shown. This solution has been applied successfully, including to warships, cruise vessels and drilling rigs.

General harmonic applications
In applications for conventional active filters (e.g. mitigate large numbers of retrofitted VFDs), it is important to optimise the rating and cost of active filters. Therefore at least 3% AC line or DC bus reactance is required in each VFD drive. Without the additional reactance) the harmonic current drawn from the filter will increase significantly (compared to without the filter), adversely affecting performance and the possibility of overloading the filter. Unfortunately, active filter suppliers rarely inform customers of this important requirement.

High quality, series passive filters can offer excellent performance (<5% Ithd) for individual LV drives up to 2500kW (e.g. thrusters). However, less expensive than active filters, passive filters are not always suitable for multi-drive applications, mainly due to reactive power issues. Active front end AFE VFDs at light load have similar issues due to the capacitors in the L-C-L filter. The decision as to whether passive or active filters are the better solution depends on the application where performance, cost, physical size/weight and maintainability are all considerations. Detailed PQ measurements should be always carried out beforehand.

Common Mode Voltage

Common mode voltage, Fig 4 (and current) is a clear and present danger to marine and offshore sectors. It is an unwanted by-product of AC PWM VFDs, inadequately covered in marine classification societies' rules or practices. It is usually not measured during sea trials or during the retrofitting of VFDs yet the use of PWM VFDs as main propulsion drives are increasing, as are the serious problems due to common mode voltage and accompanying current (CMC).

There are two aspects of CMV; one is the disruptive effect of the voltage (at high frequencies) on susceptible equipment connected to the same ground (i.e. the hull). The example in Fig 5 shows a marine fire alarm and suppression system. Left trend, no VFDs running; RHS trend VFDs running and resultant spurious fire alarms.

Common mode voltage (between each phase and ground) can occur if VFDs are not installed in strict compliance with EMC recommendations (i.e. special VFD cables, EMC landing and grounding). MV (3.3kV to 11kV) VFDs, increasingly used for main propulsion drives were supposed to drastically reduce CMV. Vessels, including the LNG carriers subject to EExd motor bearing failures mentioned, the Royal Navy's Type 45 destroyers and vessels which all have multi-level VFDs suggest otherwise.

At present, often the only viable solution is to isolate the affected equipment from the CMV. More guidance must be provided in the rules regarding the avoidance of CMV, including decelerations by manufacturers, the correct testing by a competent body during sea trails, after retrofitting on VFDs, or as part of a PQ audit.

Output LV VFD filters and other

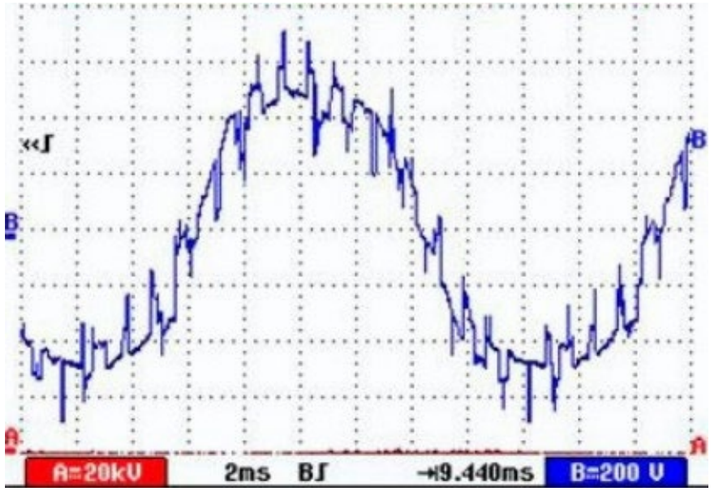

Fig 4: Typical common mode voltage waveform (1.26kHz)
© Ian C Evans, February 2020".

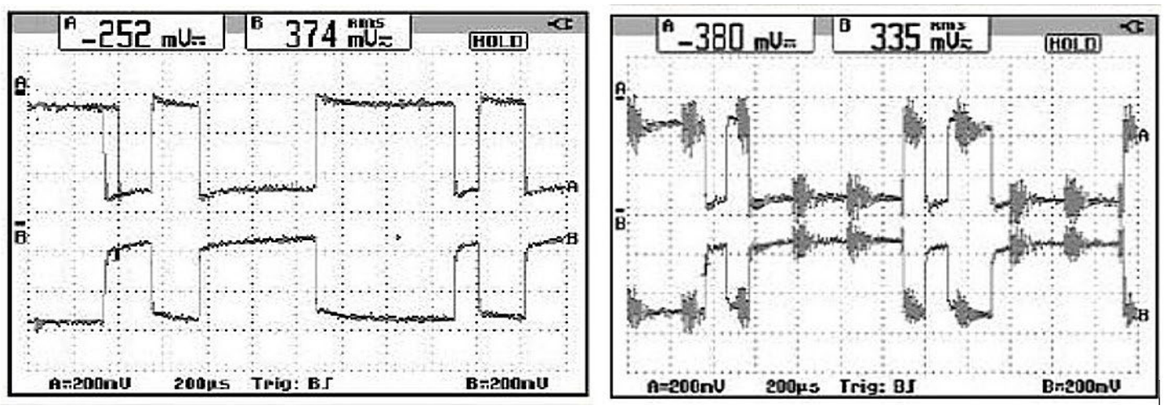

Fig 5: Effect of common mode voltage due to VFDs on fire alarm and suppression system - © Ian C Evans, February 2020".

options are available to reduce the conducted emissions but are not a substitute for the correct installation of VFDs and motors. Active common mode filters are being developed but are currently hampered by the lack of interest from shipowners and others who are largely kept ignorant of the subject by drive manufacturers and others. Many consultants and designers are not necessarily fully competent in marine PQ and EMC.

Conclusions

There are many challenges ahead in the future to ensure safety and success. Education, training and equipment are required for the ship's staff to allow them to recognise and resolve PQ issues. Specialist marine PQ consultants and experts can assist shipowners and others in these matters but this must go hand in hand with a serious upgrade of marine classification society rules, including meaningful verification which needs to reflect 21st Century reality. The marine electric future demands no less. Ian C Evans is the Principal Electrical Engineer with Harmonic Solutions Marine, a division of Sentinel Power Quality Group FZE and specialises in marine and offshore power quality. In 2004/5 he wrote the 240-page, ABS publication, "Guidance Notes the Control of Harmonics in Electrical Power Systems". He has also worked under contract for the UK's Marine Accident Investigation Branch (MAIB) and advised HSE Offshore in the UK for 7 years on offshore power quality. Ian has written many technical papers and including previous editorials for Motorship, Naval Architect, Offshore Engineer, et al. Harmonic Solutions Marine has many high-end marine clients worldwide.

https://www.emcstandards.co.uk/files/blog_37_attachment.pdf

FREE EMC TECHNICAL TRAINING!

At The Upcoming EMC And CI Event In Newbury In May 2023, There Is An Opportunity For Free Training On The Subjects Are Listed Below:-

- EMC Test Challenges For Military/ Electric Aircraft
- EMC Design For Power And Electronic Applications
- EMC Simulations
- EMC For Prime Contractors
- Practical Compliance For Manufacturers
- EMC Risk Management

Training Workshops

Cherry Clough Consultants Will Be Providing 2 Days Of Paid Training. The Places Are Limited So Please Book Early To Secure The Best Price!

Spaces Are Limited So Please Book To Ensure You Reserve Your Seat!

Liquid-Cooled Braking Resistors In Electric Vehicles

Manufacturers Can Now Take Advantage Of Liquid-Cooling Technology For Braking Resistors Without Worrying About Harming Power To Weight Ratios

A core principle of good product design is the power to weight ratio. This concept is especially important for electric vehicle (EV) component design, such as braking resistors, not least because the weight of batteries and motors in EVs is already critical. Here Steve Hughes, managing director of braking resistor specialist REO UK, explores the benefits of braking resistors that use liquid-cooling techniques and how these can be made to take up less space and weight.

The power-to-weight ratio is a calculation applied to engines and mobile power sources to enable comparison between different units or designs. The power-to-weight ratio is often used as a measurement of a vehicle's overall performance. To calculate it, an engine or motor's power output is divided by the vehicle's total weight, giving a metric that is independent of the vehicle's size. Therefore, weight is a key consideration for all electrical components in EVs, as any unnecessary weight will adversely impact the vehicle's power-to-weight ratio.

Braking Resistors

A key component in all EV designs is the humble braking resistor, which dissipates heat and slows down mechanical systems in a process known as dynamic braking. Dynamic braking can be rheostatic and regenerative. In rheostatic braking, the energy is dissipated as heat in a resistor. In regenerative braking, the electric power is fed back into the system, however, this option is typically more costly.

To improve power dissipation capabilities, resistors often come equipped with cooling fans. However, advances in liquid-cooling technology for resistors mean this is becoming an increasingly attractive option for EV applications. Liquid-cooled braking resistors use water or a coolant for heat dissipation, instead of relying on air.

Liquids have a higher density than air, resulting in them having higher heat-carrying capacities, greatly reducing temperatures and stress on electrical components and, therefore, improving service lives. Eliminating the large surface area needed for ambient or forced air cooling also means that liquid cooling systems take up less space, so can be made much smaller. Therefore, liquid cooling is ideal for resistors in higher power applications, such as EVs.

REO's BWD158 range of aluminium-clad water-cooled resistors is built to continuously dissipate up to 60 kW. They are sealed at an IP65 rating in an anodised aluminium housing and all connections and fixings are either stainless steel or anodised aluminium, protecting against corrosion. Resistances between 2 and 850 ohms are available and different sizes have power ratings from 1kW up to 60kW. The component's voltage rating is 1 kV in all cases.

The cooling system separates the coolant from the electrical circuit to ensure electrical isolation, and the unit can continue to run without coolant for a specified period to allow safe system shut-down in the event of a coolant problem. Furthermore, the encased construction of the water-cooled resistor means that it runs virtually inaudibly, unlike conventional resistors, which can emit audible noise at harmonic frequencies of the DC ripple current. This can cause problems in areas where they are close to people and personnel.

Crucially, the BWD158's highly efficient cooling system allows the resistors to be made approximately 80 per cent smaller than conventional braking resistors, meaning they do not adversely impact power-to-weight ratios in the same way as other components might. This allows EV manufacturers to take advantage of the improved cooling capabilities of liquid-cooled braking resistors without worrying about negatively impacting performance in other areas.

To find out more about REO UK's range of braking resistors, visit https://www.reo.co.uk/resistor-reohm-series-d-158.

Getting Started With Practical EMC And EM Engineering

Classic EM Authors (1)
(ones that help you understand EM concepts well)

- EMC for Product Designers, 5th edition, Tim Williams, Newnes, 2017, ISBN 978-0-08-101016-7, https://www.emcstandards.co.uk/emc-for-product-designers
- Design Techniques for EMC, Keith Armstrong, EMC Compliance Journal, 1999 and 2006 versions, Keith Armstrong, ISBN 978-0-9555118-4-4, https://www.emcstandards.co.uk/emc-design-techniques
- EMC for Systems and Installations, Tim Williams and Keith Armstrong, Newnes 2000, ISBN 0-7506-4167-3, https://www.emcstandards.co.uk/emc-for-systems-and-installations2
- EMI Troubleshooting Cookbook for Product Designers, André and Wyatt, SciTech, 2014, The IET, ISBN 978-1-61353-019-1, https://digital-library.theiet.org/content/books/ew/sbew510e
- Pocket Guides, by Kenneth Wyatt: www.amazon.com/Kenneth-Wyatt/e/B00SNQ1LJ2/ref=dp_byline_cont_book_2
- Publications by Kenneth Wyatt, www.interferencetechnology.com/author/kennethwyatt/
- Electromagnetic Compatibility Engineering, Henry Ott, Wiley, 2009, Print ISBN:9780470189306, Online ISBN:9780470508510, www.onlinelibrary.wiley.com/doi/book/10.1002/9780470508510
- EMC Made Simple, Mark Montrose, ISBN 978-0-9891032-0-6, www.montrosecompliance.com/publications/emc-books/
- The First 500 Banana Skins, five hundred stories of real-life EMI incidents, compiled by Keith Armstrong, www.emcstandards.co.uk/the-first-500-banana-skins-compiled-by-keith-ar

Classic EM Authors (2)
(ones that help you understand EM concepts well)

- High Frequency Measurements and Noise in Electronic Circuits, Douglas C Smith, ISBN 0-442-00636-5, Kluwer Academic Publishers, 1993, https://emcesd.com/hfmbook.htm
- Robust Electronic Design Reference Book, Volumes I and II, John R Barnes, Kluwer Academic Publishers, 2004, ISBN: 1-4020-7739-4 (has chapters on EMC design plus a lot more that is useful for electronic designers – it is costly, but 3 inches thick of wonderful information), www.springer.com/gp/book/9781402078309, www.amazon.co.uk/Robust-Electronic-Design-Reference-Book/dp/1402077394
- Fundamentals of Electromagnetic Compatibility, 2nd Edition, Berend Danker, Bicon Laboratories, www.bicon.nl/emc-book.html
- Designing Electronic Systems for EMC, William G Duff, Scitech Publishing, Inc., 2001, ISBN: 978-1-891121-42-5, https://www.amazon.co.uk/Designing-Electronic-Systems-Electromagnetics-Radar/dp/1891121421
- The Electromagnetic Compatibility Handbook, Dr Kenneth L Kaiser, CRC Press 2005, ISBN 0 8493 2087 9, a compilation of approximations, guidelines, models and rules-of-thumb used in EMC analyses, with their sources and limitations, delivered in a Q and A format, www.amazon.co.uk/Electromagnetic-Compatibility-Handbook-Circuits-Signals/dp/0849320879
- EMC Analysis Methods and Computational Models, F M Tesche, M V Ianoz and T Karlsson, Wiley 1997, ISBN 0-471-15573-X, all the equations you ever wanted! https://www.amazon.com/EMC-Analysis-Methods-Computational-Models/dp/047115573X

Classic EM Authors (3)
(ones that help you understand EM concepts well)

- Controlling Radiated Emissions by Design, 3rd Edition, M Mardiguian, Springer, 2014, ISBN 978-3-319-04771-3, www.springer.com/gp/book/9783319047706
- Electromagnetic Fields in Electrical Engineering: Understanding Basic Concepts, P.C.T. van der Laan, Shaker, 2005, ISBN-10: 9042302712, ISBN-13: 978-9042302716, https://www.amazon.co.uk/Electromagnetic-Fields-Electrical-Engineering-Understanding/dp/9042302712
- Electromagnetic Compatibility, 2nd Edition, Mart Coenen & Jasper Goedbloed, Mybusinessmedia, 2010, ISBN 9085720346 and 978908572034, https://books.google.co.uk/books/about/Electromagnetic_Compatibility.html?id=QYeHtgAACAAJ&redir_esc=y
- Electromagnetic Compatibility of Integrated Circuits, Sonia Ben Dhia, Mohamed Ramdani, Etienne Sicard, Springer 2006, ISBN 0-387-26600-3, www.springer.com/gp/book/9780387266008
- Design of Shielded Enclosures: Cost-Effective Methods to Prevent EMI, Louis T. Gnecco, Newnes, 2000, ISBN:

- 978-0-7506-7270-2, www.elsevier.com/books/design-of-shielded-enclosures/gnecco/978-0-08-050396-7
- EMI Troubleshooting Techniques, M. Mardiguian, McGraw Hill, 2000, ISBN: 978-0-07134-418-0, https://www.amazon.com/EMI-Troubleshooting-Techniques-Circuit-Solutions-ebook/dp/B002KCFIBC
- Trilogy of Magnetics, a design guide for EMC filters, Switch-Mode Power Supplies and RF Circuits (using magnetic components manufactured by Wurth Elektronik), https://www.we-online.com/web/en/electronic_components/produkte_pb/fachbuecher/Trilogie.php

Theory Into Practice (Conferences And Symposia)

- IEEE EMC Society virtual and online events, www.emcs.org/conferences.html
- IEEE International EMC+SIPI Annual Symposia, www.emcs.org/ieee-symposia-schedule.html
- IEEE EMC Society Young Professionals events: www.emcs.org/young-professional-events.html
- IEEE EMC EMC Chapter Colloquium and Exhibition "Table-Top Shows", www.emcs.org/exhibitions-and-table-top-shows.html
- IEEE EMC Society, Training & Education, www.emcs.org/training.html
- EMC Europe Symposium, www.emceurope.org
- EMV Symposium (Germany), https://emv.mesago.com/stuttgart/en.html
- Asia-Pacific EMC Symposium (APEMC), www.apemc2021.org
- EMC & Compliance International, https://www.emcandci.com
- The SUMMA Foundation, organisers of bi-annual conferences on high-power electromagnetics, HPEM, which includes lightning, HIRF, NEMP, HEMP, Intentional EMI, etc. http://ece-research.unm.edu/summa/

Online Resources (1)

- Kenneth Wyatt specialises in EMC troubleshooting, near-field and pre-compliance testing, and practical EMC design, and provides many very excellent free resources on these topics at: www.emc-seminars.com
- Todd Hubing provides training courses and free EMC articles and videos at: www.learnemc.com
- Doug Smith has a huge list of articles free from: https://www.emcesd.com/index.htm
- Many of Tim William's publications on EMC are free from: www.elmac.co.uk/Papers.html
- Keith Armstrong's publications on EMC are free from: www.emcstandards.co.uk
- Keith Armstrong's EMC training courses can be purchased online as PDF course notes from: www.emcstandards.co.uk/online-training
- Free webinars by Keith Armstrong and others, from: www.interferencetechnology.com/
- webinar-series/ or from www.youtube.com/user/InterferenceTech1 including:

  - Cost-effective EMC Design by Working with the Laws of Physics "Your product is trying to help you pass EMC"

  - Understanding EMC Basics, i.e. "The Physics of EMC" as a 3 part series

- 890 EMI Stories ("Banana Skins"), www.emcstandards.co.uk/emi-stories
- EMC-Related Formulae, from Robert Richards, www.emc.toprudder.com/formulas2.pdf

Online Resources (2)

- EMC Standards, www.emcstandards.co.uk/additional-resources
- EMC Testing, by Tim Williams and Keith Armstrong, EMC Compliance Journal, 2001-2002: www.emcstandards.co.uk/diy-emc-testing-series-2001
  7 parts, Part 1,2 relevant to close-field probing
- EMI Pre-Compliance Testing, Ken Wyatt, Interference Technology Magazine, Jan 16, 2020, www.interferencetechnology.com/emi-pre-compliance-testing/
- Clemson University Vehicular Electronics Laboratory, EMC Resources (including online calculators): www.cecas.clemson.edu/cvel/emc/
- Missouri University of Science and Technology, Scholar's Mine: https://scholarsmine.mst.edu/emc_facwork/
- EMI Analyst's 'Toolbox' of EMC Resources (including online calculators) www.emisoftware.com/toolbox/
- RF Café a unique portal of RF, microwave, wireless, and other engineering resources, www.rfcafe.com/
- EEWeb, a suite of free design, verification, and analysis tools www.eeweb.com/tools

- Forums for experienced and novice designers to share tips and ask/answer questions: www.eeweb.com
- Estimating the Overall Emissions from Combinations of Equipment, www.emcstandards.co.uk/estimating-the-overall-emissions-of-combined-it
  www.emcstandards.co.uk/emc-testing
  https://www.emcstandards.co.uk/complying-with-the-emc-directive1
- Texas Instruments Power Design Center, https://tipowerfundamentals.com/
- Basics of Modulation and Demodulation, Microwave Journal: https://cdn.baseplatform.io/files/base/ebm/mwrf/document/2019/03/mwrf_8447_21_b.pdf

Online Resources (3)

- Saturn PCB Design Toolkit Version 8.01: www.saturnpcb.com/pcb_toolkit/
- Qorvo Design Calculators and Tools: www.qorvo.com/design-hub/design-tools
- Microwave Journal's list of providers of Full-Wave Solvers for Maxwells Equations: www.microwavejournal.com/articles/29299-electromagnetic-analysis
- Microwave Journal's list of providers of circuit and system design analysers and simulators: www.microwavejournal.com/articles/29301-circuit-and-system-design-analysis-and-simulation
- IEEE Xplore digital library, https://ieeexplore.ieee.org/Xplore/guesthome.jsp
- EMC Test Lab Guide, www.emcfastpass.com/emc-testing-beginners-guide/emc-test-lab-guide/
- Real Time Spectrum-Analyzer Mini Guide, Interference Technology magazine, 2016, edited by Kenneth Wyatt: https://interferencetechnology.com/wp-content/uploads/2016/10/2016-IT-Real-Time-Spectrum-Analyzer-Guide.pdf
- Conducted and Radiated Emissions Testing Application Note: https://www.tek.com/en
- Laird, shielding resources, https://www.laird.com/resources
- International Amateur Radio Union, EMC Resources: www.iaru-r1.org/about-us/committees-and-working-groups/emc-committee-c7/links-to-emc-resources/
- Amateur Radio, ARRL, Organizations Developing Standards and Policies Related to EMC: www.arrl.org/organizations-working-with-emc-rfi
- The SUMMA Foundation, research notes on high-power electromagnetics (inc. lightning, HPEM, and IEMI): www.ece-research.unm.edu/summa/notes/index.html

Online Resources (4)

- https://incompliancemag.com/category/standards/
- https://incompliancemag.com/category/resources/
- https://incompliancemag.com/category/fundamentals/
- https://incompliancemag.com/category/testing/
- https://incompliancemag.com/category/design/
- https://incompliancemag.com/magazine/past-issues/
- https://learn.interferencetechnology.com/2020-emc-testing-guide/
- https://learn.interferencetechnology.com/2020-medical-emc-guide/
- https://learn.interferencetechnology.com/2020-iot-wireless-5g-emc-guide/
- https://learn.interferencetechnology.com/2020-emc-fundamentals-guide/
- https://learn.interferencetechnology.com/2019-directory-and-design-guide/
- https://learn.interferencetechnology.com/2020-military-and-aerospace-emc-guide/
- https://learn.interferencetechnology.com/2021-automotive-emc-guide/
- https://learn.interferencetechnology.com/2019-components-and-materials-guide/

Online Resources (5) EMC and RF Magazines

- The IEEE EMC Society's EMC Magazine: www.emcs.org/emc-magazine.html
- Interference Technology magazine: www.interferencetechnology.com

  Archive of Guides: www.interferencetechnology.com/digital-publications/
- SAFETY & EMC magazine (in Chinese): www.safetyandemc.com
- Journal of Electromagnetic Waves and Applications, www.tandfonline.com/loi/tewa20
- In Compliance magazine: www.incompliancemag.com
- Archive of past editions: www.incompliancemag.com/magazine/past-issues/

  www.incompliancemag.com/category/standards/

  https://incompliancemag.com/category/resources/

  www.incompliancemag.com/category/fundamentals/

  www.incompliancemag.com/category/testing/

  www.incompliancemag.com/category/design/

  www.incompliancemag.com/magazine/past-issues/
- Signal Integrity Journal, (includes Power Integrity and EMC), www.signalintegrityjournal.com

-
- Electro Magnetic Applications, www.ema3d.com/webinars/ (scroll down to register for their Newsletter)
- Microwaves & RF magazine, www.mwrf.com
- Microwave Journal, www.microwavejournal.com

Online Resources (6) Pre-Compliance Testing

- EMI Pre-Compliance Testing, Ken Wyatt, Interference Technology Magazine, Jan 16, 2020, www.interferencetechnology.com/emi-pre-compliance-testing/
- How to Build Your Own EMI Troubleshooting and Pre-Compliance Kit, March 2, 2020, Dylan Stinson, www.interferencetechnology.com/how-to-build-your-own-emi-troubleshooting-and-pre-compliance-kit/
- A Simple Method for Estimating Radiated Emissions, in www.emcstandards.co.uk/cost-effective-uses-of-close-field-probing1
- DIY EMC Testing, a six-part series in 2001, https://www.emcstandards.co.uk/diy-emc-testing-series-2001
- The Financial Case for an EMI/EMC Pre-Compliance Test Solution, www.tek.com/blog/financial-case-emi-emc-pre-compliance-test-solution
- Low-cost EMI Pre-compliance Testing using a Spectrum Analyzer, www.tek.com/document/application-note/low-cost-emi-pre-compliance-testing-using-spectrum-analyzer
- EMI Pre-Compliance Testing and Troubleshooting with Tektronix EMCVu, www.tek.com/document/application-note/emi-pre-compliance-testing-and-troubleshooting-tektronix-emcvu
- Practical EMI Troubleshooting, www.tek.com/document/application-note/emi-pre-compliance-testing-and-troubleshooting-tektronix-emcvu

EMC Test Equipment Suppliers (1)

Many of these post useful articles and white papers on EMC Testing on their websites

- Aaronia AG: https://aaronia.com/
- AirSpy, Software-Defined Radio (can be configured as a very low-cost spectrum analyser): www.airspy.com
- Amplifier Research: https://arworld.us/ especially their Orange Book of Knowledge, www.arworld.us/html/obkrequest.asp
- Anritsu: www.anritsu.com/en-US
- Berkeley Nucleonics: www.berkeleynucleonics.com
- B&K Precision: www.bkprecision.com/products/rf-test-instruments.html
- COM-POWER Corporation: www.com-power.com
- EM Test: www.emtest.com/home.php

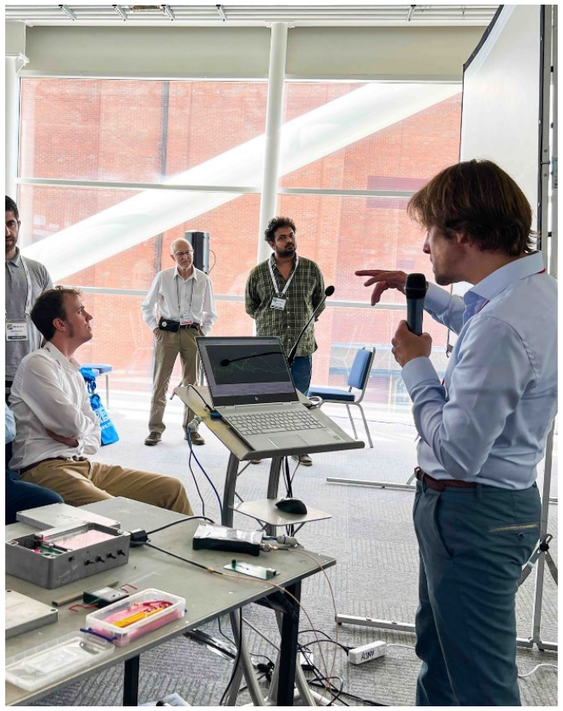

- EMC Partner: www.emc-partner.com
- ETS-Lindgren, www.ets-lindgren.com
- Eurofins York, comparison noise emitters, compact antenna: www.yorkemc.com/products/
- Frankonia: www.frankonia-solutions.com
- Gauss Instruments: https://gauss-instruments.com/en/
- Haefley AG: www.pfiffner-group.com/about-pfiffner-group/haefely
- Kent Electronics (small antennas): www.wa5vjb.com
- Keysight Technologies: www.keysight.com
- Langer EMV-Technik: www.langer-emv.de/en/index
- Laplace Instruments Ltd: www.laplace.co.uk

EMC Test Equipment Suppliers (2)

Many of these post useful articles and white papers on EMC Testing on their websites

- MDL Technologies: https://www.mdltechnologies.co.uk/
- Microwave Vision Group: https://www.mvg-world.com/en
- Mini-Circuits: https://www.minicircuits.com/
- Noiseken: www.noiseken.com
- Rohde & Schwarz: www.rohde-schwarz.com

- Rigol Technologies: www.rigolna.com
- Siglent Technologies: www.siglentna.com
- Signal Hound: www.signalhound.com
- TekBox Technologies: https://www.tekbox.com
- Tektronix: www.tek.com
- Teseq: www.teseq.com/en/index.php
- Thurlby Thandar: www.aimtti.com
- Thermofisher Scientific (was Keytek) (Electrostatic Discharge (ESD) & Transmission Line Pulse (TLP) Systems): www.thermofisher.com
- TPI products (e.g. USB-powered signal generators): www.rf-consultant.com
- Triarchy Technologies CORP., USB dongle spectrum analyzers, www.triarchytech.com
- Windfreak Technologies: www.windfreaktech.com
- Distributors for Rigol, Siglent, TekBox: Saelig Electronics (USA): www.saelig.com, Telonic Instruments (UK): www.telonic.co.uk

Standards

- www.interferencetechnology.com/category/standards/
- Interference Technology Engineer's Master (ITEM) 2021, an exhaustive guide full of invaluable EMC directories, standards, formulas, calculators, lists, and "how-to" articles, compiled in easy-to-find formats: www.learn.interferencetechnology.com/item-2021/
- In Compliance magazine's Standards Library: www.incompliancemag.com/standards-library/
- In Compliance magazine's Standards Updates: www.incompliancemag.com/topics/standards/standards-updates/
- American National Standards Institute (ANSI), www.ansi.org
- CSA Group, www.csagroup.org
- European Telecommunications Standards Institute (ETSI), www.etsi.org
- International Electrotechnical Commission (IEC), www.iec.ch
- International Organization for Standardization (ISO), www.iso.org/home.html
- National Institute of Standards and Technology (NIST), www.nist.gov/
- RTCA, aviation standards, www.rtca.org
- USA Military Standards from 'Every Spec', www.everyspec.com/MIL-STD/MIL-STD-0300-0499/?page=6
- Amplifier Research's Orange Book of Knowledge, www.arworld.us/html/obkrequest.asp

TWEX

"Ten Minutes With An EXpert"

Get Your Free 10 Minutes Consultation!

www.emcandci.com